Appendix I

Traffic Impact Assessment

Reference number CHK50769210

SECTION 16 PLANNING APPLICATION FOR PROPOSED TEMPORARY OPEN STORAGE OF MODULAR INTEGRATED CONSTRUCTION (MIC) COMPONENTS AND CONSTRUCTION MATERIALS WITH ANCILLARY WORKSHOPS, OFFICE, STAFF CAR PARK AND MACHINERY FOR A PERIOD OF 3 YEARS AT VARIOUS LOTS IN D.D. 107, SHA PO, YUEN LONG, NEW TERRITORIES

TRAFFIC IMPACT ASSESSMENT

SYSTRA MVA

TABLE OF CONTENTS PAGE

1	INTRODUCTION	5
1.1	BACKGROUND	5
1.2	STUDY OBJECTIVES	5
1.3	STRUCTURE OF THE REPORT	5
2	EXISTING TRAFFIC CONTEXT	6
2.1	EXISTING ROAD NETWORK	6
2.2	CRITICAL JUNCTIONS AND ROAD LINKS	7
2.3	PUBLIC TRANSPORT SERVICES	9
3	PROPOSED DEVELOPMENT	10
3.1	PROPOSED USES AND SITE CONFIGURATIONS	10
3.2	VEHICULAR ACCESS ARRANGEMENTS	10
4	FUTURE TRAFFIC CONDITIONS	11
4.1	DESIGN YEAR	11
4.2	REFERENCE TRAFFIC FORECASTS	11
4.3	DESIGN TRAFFIC FORECASTS	12
5	TRAFFIC IMPACT ASSESSMENT	13
5.1	JUNCTION AND ROAD LINK ASSESSMENT	13
6	SUMMARY AND CONCLUSION	15
6.1	SUMMARY	15
6.2	CONCLUSION	16

TABLE OF CONTENTS

PAGE

Table 2.1	Identified Critical Junctions and Road Links for Assessment	7
Table 2.2	Operational Performance of Critical Junctions in 2023	7
Table 2.3	Operational Performance of Critical Road Links in 2023	8
Table 2.4	Existing Public Transport Services in the Vicinity	9
Table 4.1	ATC Counting Station Records in the Local Area	11
Table 4.2	Population Projection of Tuen Mun/ Yuen Long Other Area from 2021-2027	11
Table 4.3	Estimated Trip Generation for the Proposed Development	12
Table 5.1	Layout and Arrangement of Critical Junctions in 2027	13
Table 5.2	Operational Performance of Critical Junctions in 2027	13
Table 5.3	Operational Performance of Critical Road Links in 2027	14

APPENDICES

Appendix A	Calculation Details
Appendix B	Swept Path Analysis

LIST OF FIGURES

Drawing 1.1	Site Location
Drawing 2.1	Existing Road Network
Drawing 2.2	Junction Layout of San Tam Road / Fung Kat Heung Road (J1)
Drawing 2.3	Junction Layout of Fung Kat Heung Road / Mei Fung Road (J2)
Drawing 2.4	Junction Layout of Mei Fung Road / Shui Mei Road (J3)
Drawing 2.5	Junction Layout of Shui Mei Road / Castle Peak Road – Tam Mi (J4)
Drawing 2.6	Junction Layout of San Tam Road / Castle Peak Road – Tam Mi (J5)
Drawing 2.7	Observed Traffic Flows (NOV 2023)
Drawing 2.8	Availability of Public Transport Services
Drawing 3.1	Indicative Layout Plan
Drawing 3.2	Ingress / Egress Routes
Drawing 4.1	2027 Reference Traffic Flows
Drawing 4.2	2027 Design Traffic Flows

1 INTRODUCTION

1.1 Background

1.1.1 This Section 16 Planning Application is submitted in support of the proposed temporary open storage of Modular Integrated Construction (MiC) Components and Construction Materials with Ancillary Workshops, Office, Staff Car Park and Machinery for a Period of 3 Years at various lots in D.D. 107, Sha Po, Yuen Long, New Territories.

1.1.2 The location of the Application Site is indicated in **Figure 1.1**, which has a total area of about 9,705m^2. The Proposed Temporary Use aims to serve as a transhipment depot for MiC components and a hub for modular construction materials being used for housing project sites, with the objective of meeting the growing demand for MiC applications while ensuring efficient logistics and seamless implementation of MiC in housing projects.

1.2 Study Objectives

1.2.1 In support of the Section 16 Planning Application, a Traffic Impact Assessment (TIA) study is prepared with following key objectives:

- To assess the existing traffic conditions in the vicinity of the Application Site;
- To estimate the likely traffic generated by the Application Site;
- To forecast the future traffic condition in the design year 2027;
- To assess the impacts of traffic generation by the Application Site on the surrounding road network and recommend any improvement measures if necessary.

1.3 Structure of the Report

1.3.1 Following this introductory chapter, there are five further chapters.

- **Chapter 2 – Existing Traffic Conditions**, which describes the existing transport context in the vicinity of the Application Site, including current road network, assessment of existing traffic conditions and availability of public transport services.
- **Chapter 3 – The Application Site**, which briefs the planning parameters of the Application Site, including the access arrangements and internal transport provisions.
- **Chapter 4 – Future Traffic Conditions**, which presents the traffic forecasting methodology and estimates the future traffic conditions in the vicinity.
- **Chapter 5 – Traffic Impact Assessment**, which estimates the traffic generation and assesses the traffic impacts of the proposed uses in the future design year. Recommendation of improvement measures will be included if necessary.
- **Chapter 6 – Summary and Conclusion**, which summarises the findings of the study and presents the conclusion regarding the potential traffic impact by the Proposed Temporary Use.

2 EXISTING TRAFFIC CONTEXT

2.1 Existing Road Network

2.1.1 The existing road network in the vicinity is shown in **Figure 2.1**, which comprises the following public roads:

- Castle Peak Road – Tam Mi Section;
- San Tam Road;
- Fung Kat Heung Road;
- Fung Mei Road;
- Shui Mei Road

2.1.2 Castle Peak Road – Tam Mi Section is a single 2-lane carriageway running in north-south direction. This rural road connects Au Tau Interchange in the south for further linkage to Kam Tin and Yuen Long Town Centre.

2.1.3 San Tam Road is a single 2-lane carriageway running in north-south direction. This rural road starts from the junction with Park Yoho in the south and provides access for the local developments to the east of San Tin Highway.

2.1.4 Fung Kat Heung Road is a single track access road running in east-west direction connecting San Tam Road in the west and Fung Kat Heung in the east.

2.1.5 Fung Mei Road is a single track access road running in north-south direction connecting Fung Kat Heung Road in the north and Shui Mei Road in the south.

2.1.6 Shui Mei Road is a single track access road running in east-west direction connecting Castle Peak Road – Tam Mi Section in the west and Shui Mei Tsuen in the east.

2.2 Critical Junctions and Road Links

2.2.1 The critical junctions were identified for assessment of traffic impact due to the Application Site. It is listed in **Table 2.1** below.

Table 2.1 Identified Critical Junctions and Road Links for Assessment

Ref.	Junction	Type	Figure No.
J1	San Tam Road / Fung Kat Heung Road	Priority	**Figure 2.2**
J2	Fung Kat Heung Road / Mei Fung Road	Priority	**Figure 2.3**
J3	Mei Fung Road / Shui Mei Road	Priority	**Figure 2.4**
J4	Shui Mei Road / Castle Peak Road – Tam Mi	Priority	**Figure 2.5**
J5	San Tam Road / Castle Peak Road – Tam Mi	Signalised	**Figure 2.6**

2.2.2 The location of the above junctions are illustrated in **Figure 2.1**. The existing junction layout are shown in **Drawings 2.2 – 2.6**.

2.2.3 In order to appraise the existing traffic conditions of the above junctions, a traffic survey in form of manual classified count was conducted at a typical weekday in November 2023. The background traffic flows are shown in **Drawing 2.7**.

2.2.4 Operational performance of the critical junctions have been assessed in accordance with the existing traffic flows and the results are summarised in **Table 2.2** below.

Table 2.2 Operational Performance of Critical Junctions in 2023

Index	Junction	Type	RC[(1)]/ DFC[(2)]	Operational Performance	
				AM Peak	PM Peak
J1	San Tam Road / Fung Kat Heung Road	Priority	DFC	0.28	0.27
J2	Fung Kat Heung Road / Mei Fung Road	Priority	DFC	0.05	0.07
J3	Mei Fung Road / Shui Mei Road	Priority	DFC	0.04	0.05
J4	Shui Mei Road / Castle Peak Road – Tam Mi	Priority	DFC	0.22	0.18
J5	San Tam Road / Castle Peak Road – Tam Mi	Signalised	RC	48%	73%

Notes:
(1) RC = Reserve Capacity;
(2) DFC = Design Flow/Capacity

2.2.5 All critical junctions in the vicinity are currently operating within capacities. Details of junction assessment are enclosed in the **Appendix A**.

2.2.6 The performance of the single track access road in the vicinity of the Application Site have also been reviewed in terms of the Flow to Capacity (V/C) ratio. **Table 2.3** below shows that all of the road links are operating with ample capacity.

Table 2.3 Operational Performance of Critical Road Links in 2023

Index	Road Links	Type[(1)]	Design Flow (veh/hr)	2-way Flow (veh/hr) and V/C Ratio			
				AM Peak		PM Peak	
L1	Fung Kat Heung Road (near San Tam Road)	RR	800	156	0.20	178	0.22
L2	Fung Kat Heung Road (near Fung Mei Road)	ST	100	73	0.73	84	0.84
L3	Mei Fung Road (near Fung Kat Heung Road)	ST	100	46	0.46	56	0.56
L4	Mei Fung Road (near Shui Mei Road)	ST	100	52	0.52	62	0.62
L5	Shui Mei Road (near Fung Mei Road)	ST	100	76	0.76	76	0.76
L6	Shui Mei Road (near Castle Peak Road – Tam Mi)	ST	100	74	0.74	57	0.57

Notes:
(1) Road Type: ST = Single Track Access Road; RR = Rural Road (Single 2-lanes)

2.3 Public Transport Services

2.3.1 Public transport services are available at Castle Peak Road - Tam Mi and San Tam Road near Sha Po Tsuen to the west of the Application Site, whilst most bus and GMB routes are connecting to Yuen Long Town Centre.

2.3.2 There is also a public transport interchange within the comprehensive development of Park Yoho.

2.3.3 The existing public transport services in the vicinity of Application Site are indicated on **Figure 2.8** and summarised **Table 2.4** below.

Table 2.4 Existing Public Transport Services in the Vicinity

Bus Route	**Destinations**		**Stop (1)**
KMB 68	Park Yoho	Yoho Mall II	(C)
KMB 68F	Park Yoho	Yuen Long Park	(C)
KMB 268M	Park Yoho	Tsuen Wan West Station	(C)
KMB 76K	Sheung Shui (Ching Ho)	Long Ping Estate	(A) (B)
CTB 976	Lok Ma Chau (San Tin)	Sai Wan Ho	(A) (B)
CTB 976A	Lok Ma Chau (San Tin)	Siu Sai Wan	(A) (B)
GMB Route	**Destinations**		**Stop (1)**
GMB 36	Tai Shang Wai	Yuen Long (Fook Hong Street)	(A) (B)
GMB 37	Yau Tam Mei	Yuen Long (Fook Hong Street)	(A) (B)
GMB 38	Ha Chuk Yuen	Yuen Long (Fook Hong Street)	(A) (B)
GMB 75	Ha Wan Tsuen	Yuen Long (Fook Hong Street)	(A) (B)
GMB 76	Siu Hum Tsuen	Yuen Long (Fook Hong Street)	(A) (B)
GMB 78	Lok Ma Chau (San Tin)	Pat Heung Road	(A) (B)
GMB 603	Fung Kat Heung	Yuen Long (Fung Cheung Road)	(A) (B)
GMB 620	Park Yoho	Kam Sheung Road Station	(C)

Notes:
(1) Stop (A): Sha Po Tsuen (Castle Peak Road – Tam Mi) northbound
Stop (B): Sha Po Tsuen (San Tam Road) southbound
Stop (C): Park Yoho (Public Transport Interchange)

3 PROPOSED DEVELOPMENT

3.1 Proposed Uses and Site Configurations

3.1.1 The Application Site is proposed for "Temporary Open Storage of Modular Integrated Construction (MiC) Components with Ancillary Workshops, Office, Staff Car Park and Machinery for a Period of 3 Years".

3.1.2 It aims to serve as a transhipment depot for MiC components, with the objective of meeting the growing demand for MiC applications while ensuring efficient logistics and seamless implementation of MiC in housing projects. It will also serve as the hub for the modular construction material being used for the project site in order to promote more Green Construction Methodology.

3.1.3 The Application Site comprises an open storage area, providing a secure location for the temporary storage of MiC components and modular construction material, along with ancillary facilities, including three workshops, an office, a staff car park, a guardhouse and machinery (i.e. tower crane and hoisting crane etc) to support its operational needs. The Indicative Layout Plan is shown in **Figure 3.1**.

3.2 Vehicular Access Arrangements

3.2.1 An ingress/egress will be established at the south-west corner abutting Shui Mei Road with about 8m in width. It is also proposed a setback of 4m from Shui Mei Road to facilitate the delivery of MiC components and modular construction materials by articulated trailers up to 15m in length, of which the corresponding swept path analysis is shown in **Appendix B**.

3.2.2 The operation hours of the proposed uses will be restricted to from 08:00 to 19:00 (Monday to Saturday, excluding Sunday and Public Holidays). Advanced reservation will be mandatory for all loading and unloading activities in order to arrange the delivery and collection activities in a more organised manner.

3.2.3 To minimize the potential implications to Shui Mei Road with close proximity to residential developments of Park Yoho, the ingress and egress routes of articulated trailers will adopt an alternative route to San Tam Road via Mei Fung Road and Fung Kat Heung Road as shown in **Figure 3.2**, which is currently used by heavy vehicles for temporary open storage and industrial uses en-route.

3.2.4 The proposed ancillary office is a two-story structure designed to accommodate about 50 staff members. The office is intended to provide administrative/supporting services to facilitate the seamless transhipment of MiC components.

3.2.5 Ten private car parking spaces are proposed to serve the staff, which is consistent with the number of parking spaces in the previously approved application (No. A/YL-KTN/715). The application site will not open to the public or any unauthorised persons at any time. Only senior-level staffs are allowed to commute to and from work using private vehicles, whereas other staff members will access the application site via public transportation.

4 FUTURE TRAFFIC CONDITIONS

4.1 Design Year

4.1.1 This application is tentatively for a period of 3 years which starts from 2024 and ends in 2027. For conservative purpose, Year 2027 is hence adopted to be the design year.

4.2 Reference Traffic Forecasts

Historical Growth Trend

4.2.1 The Annual Traffic Census (ATC) published by the Transport Department provides a comprehensive record of traffic flows in the territory. The records from the ATC stations in the vicinity of the Application Site for 2016-2022 were summarized in **Table 4.1**.

Table 4.1 ATC Counting Station Records in the Local Area

ATC Station No.	Road Name	Average Annual Daily Traffic (A.A.D.T)							Growth Rate (p.a.)
		2016	2017	2018	2019	2020	2021	2022	2022/ 2016
5505	San Tam Road	12,590	12,390	12,700	13,330	13,420	13,960	13,540	+1.2%

4.2.2 As indicated **in Table 4.1**, it can be noted that over the last 6 years, the average growth pattern in the area from 2016 to 2022 has a increase rate of +1.2% per annum.

Population Projection Data

4.2.3 With reference to the Population Distribution Projections published by Planning Department dated March 2021, the population projection of Tuen Mun/Yuen Long Other Area for year 2021 to 2027 are extracted as shown in **Table 4.2**.

Table 4.2 Population Projection of Tuen Mun/ Yuen Long Other Area from 2021-2027

Population[(1)]	Year 2021	Year 2027
Tuen Mun/Yuen Long Other Area	204,900	230,800
Average Growth (p.a.)	+2.0% (2021-2027)	

Notes:
(1) Projections of Population Distribution published by Planning Department dated March 2021

4.2.4 As indicated in **Table 4.2**, the average growth between 2021 and 2027 can be represented by a growth of +2.0% per annum.

Adopted Growth Rate

4.2.5 Taking account of the historical traffic pattern and the future population projection, a conservative estimation of **+2.0% per annum** is adopted for the traffic projection from 2023 to 2027.

4.2.6 The anticipated 2027 reference traffic flows, as presented in **Figure 4.1** can be derived by the equation below:

2027 Reference Flows = 2023 Observed Flows x Growth Factor of 2.0% p.a. for 4 years

= 2023 Observed Flows x $(1 + 2.0\%)^4$

4.3 Design Traffic Forecasts

4.3.1 At present, the trip generation rates for Open Storage are not covered by the Transport Planning and Design Manual (TPDM).

4.3.2 Based on the operation of the proposed temporary uses, the vehicular traffic generation and attraction for the Application Site are estimated to be 2 vehicles per hour (each direction) at maximum, assuming a minimum duration of 30 minutes for each vehicle.

4.3.3 Nevertheless, it is also assumed an attraction of 10 private cars (inbound) during the AM peak and a generation of 10 private cars (outbound) during the PM peak for the proposed parking spaces within the Application Site. The estimated trip generation and attraction are summarised in **Table 4.3**.

Table 4.3 Estimated Trip Generation for the Proposed Development

The Application Site	Estimated Number of Trips (veh/hr)			
	AM Peak		PM Peak	
	Generation	Attraction	Generation	Attraction
MiC Operation (15m Articulated Trailers)	2	2	2	2
Staff Parking (Private Cars)	-	10	10	-

4.3.4 By superimposing the above development traffic flows and the 2027 reference traffic forecast (without Proposed Development), the design traffic forecasts (with Proposed Development) in 2027 can be derived as below:

4.3.5 2027 Design Flows = 2027 Reference Flows + Estimated Trip Generation

4.3.6 The 2027 AM and PM peak design traffic forecasts (with Proposed Development) are presented in **Figure 4.2**.

5 TRAFFIC IMPACT ASSESSMENT

5.1 Junction and Road Link Assessment

5.1.1 The existing layouts will be adopted in design year 2027 for the operational assessments of the critical junctions were summarised in **Table 5.1**.

Table 5.1 Layout and Arrangement of Critical Junctions in 2027

Ref.	Junction	Type	Layout	Figure No.
J1	San Tam Road / Fung Kat Heung Road	Priority	Existing	**Figure 2.2**
J2	Fung Kat Heung Road / Mei Fung Road	Priority	Existing	**Figure 2.3**
J3	Mei Fung Road / Shui Mei Road	Priority	Existing	**Figure 2.4**
J4	Shui Mei Road / Castle Peak Road – Tam Mi	Priority	Existing	**Figure 2.5**
J5	San Tam Road / Castle Peak Road – Tam Mi	Signalised	Existing	**Figure 2.6**

5.1.2 To assess the traffic impact due to the Application Site, capacity analysis of the identified critical junctions in the study area for both reference and design scenarios in year 2027 has been carried out. The results are summarised and presented in **Table 5.2**.

Table 5.2 Operational Performance of Critical Junctions in 2027

Index	Junction	Type	RC(1)/ DFC(2)	Operational Performance			
				Reference 2027 (Without Dev.)		Design 2027 (With Dev.)	
				AM Peak	PM Peak	AM Peak	PM Peak
J1	San Tam Road / Fung Kat Heung Road	Priority	DFC	0.33	0.31	0.34	0.32
J2	Fung Kat Heung Road / Mei Fung Road	Priority	DFC	0.05	0.07	0.06	0.08
J3	Mei Fung Road / Shui Mei Road	Priority	DFC	0.05	0.05	0.05	0.06
J4	Shui Mei Road / Castle Peak Road – Tam Mi	Priority	DFC	0.26	0.20	0.26	0.23
J5	San Tam Road / Castle Peak Road – Tam Mi	Signalised	RC	36%	60%	35%	59%

Notes:
(1) RC = Reserve Capacity;
(2) DFC = Design Flow/Capacity

5.1.3 It can be revealed that the all critical junctions in the vicinity will operate with ample capacity in Year 2027 with or without the proposed open storage.

5.1.4 Based on the design flow of corresponding road type, it can be shown in **Table 5.3** below that all of the local road links in the vicinity of will operate in good conditions in year 2027.

Table 5.3 Operational Performance of Critical Road Links in 2027

Index	Road Links	Type[(1)]	Design Flow (veh/hr)	2-way Flow (veh/hr) and V/C Ratio			
				Reference 2027 (Without Dev.)		Design 2027 (With Dev.)	
				AM Peak	PM Peak	AM Peak	PM Peak
L1	Fung Kat Heung Road (near San Tam Road)	RR	800	168	193	172	197
				0.21	0.24	0.22	0.25
L2	Fung Kat Heung Road (near Fung Mei Road)	ST	100	80	90	84	94
				0.80	0.90	0.84	0.94
L3	Fung Mei Road (near Fung Kat Heung Road)	ST	100	50	60	54	64
				0.50	0.60	0.54	0.64
L4	Fung Mei Road (near Shui Mei Road)	ST	100	56	66	60	70
				0.56	0.66	0.60	0.70
L5	Shui Mei Road (near Fung Mei Road)	ST	100	83	82	87	86
				0.83	0.82	0.87	0.86
L6	Shui Mei Road (near Castle Peak Road – Tam Mi)	ST	100	81	61	91	71
				0.81	0.61	0.91	0.71

Notes:
(1) Road Type: ST = Single Track Access Road; RR = Rural Road (Single 2-lanes)

5.1.5 Therefore, it can be concluded that the proposed temporary uses at the Application Site would not cause any adverse traffic impact to the surrounding road network from the traffic point-of-view.

6 SUMMARY AND CONCLUSION

6.1 Summary

6.1.1 This Traffic Impact Assessment (TIA) Report is prepared in support of the Section 16 Planning Application for the proposed temporary open storage of Modular Integrated Construction (MiC) Components and Construction Materials with Ancillary Workshops, Office, Staff Car Park and Machinery for a Period of 3 Years at various lots in D.D. 107, Sha Po, Yuen Long, New Territories.

6.1.2 The Application Site has a total area of about 9,705m^2. The Proposed Temporary Use aims to serve as a transhipment depot for MiC components and a hub for modular construction materials being used for housing project sites, with the objective of meeting the growing demand for MiC applications while ensuring efficient logistics and seamless implementation of MiC in housing projects.

6.1.3 The Application Site comprises an open storage area, providing a secure location for the temporary storage of MiC components and modular construction material, along with ancillary facilities, including three workshops, an office, a staff car park, a guardhouse and machinery (i.e. tower crane and hoisting crane etc) to support its operational needs.

6.1.4 An ingress/egress will be established at the south-west corner abutting Shui Mei Road with about 8m in width. It is also proposed a setback of 4m from Shui Mei Road to facilitate the delivery of MiC components and modular construction materials by articulated trailers up to 15m in length.

6.1.5 The operation hours of the proposed uses will be restricted to from 08:00 to 19:00 (Monday to Saturday, excluding Sunday and Public Holidays).

6.1.6 To minimize the potential implications to Shui Mei Road with close proximity to residential developments of Park Yoho, the ingress and egress routes of articulated trailers will adopt an alternative route via Mei Fung Road and Fung Kat Heung Road, which is currently used by heavy vehicles for temporary open storage and industrial uses en-route.

6.1.7 The proposed ancillary office is a two-story structure designed to accommodate about 50 staff members for administrative/supporting services to facilitate the seamless transhipment of MiC components.

6.1.8 Ten private car parking spaces are proposed to serve the staff, which is consistent with the number of parking spaces in the previously approved application (No. A/YL-KTN/715). The application site will not open to the public or any unauthorised persons at any time. Only senior-level staffs are allowed to commute to and from work using private vehicles, whereas other staff members will access the application site via public transportation

6.1.9 Traffic count surveys were conducted in the surrounding road network of the Application Site. According to the junction and link capacity assessments, it is revealed that the critical junction and all road links at present are operating with ample capacities.

6.1.10 Year 2027 is adopted to be the design year, which is the end of the proposed used period of this application. The 2027 reference traffic forecasts have been projected from the observed year 2023 with a growth factor of +2.0% per annum.

6.1.11 Based on the operation of the proposed temporary uses, the vehicular traffic generation and attraction for the Application Site are estimated to be 2 vehicles per hour (each direction) at maximum, assuming a minimum duration of 30 minutes for each vehicle.

6.1.12 Nevertheless, it is also assumed an attraction of 10 private cars (inbound) during the AM peak and a generation of 10 private cars (outbound) during the PM peak for the proposed parking spaces within the Application Site.

6.1.13 The traffic assessments revealed that the critical junction and all road links in the vicinity will continue to operate with ample capacities upon the design year 2027.

6.2 Conclusion

6.2.1 The TIA has demonstrated that the traffic generation by the Application Site can all be absorbed by the external road network, including the junctions and road links.

6.2.2 To facilitate the delivery of MiC components and modular construction materials, the vehicular access arrangements have been optimized with relocated run-in/out and setback from Shui Mei Road. Alternative access routes have also been considered to minimize the potential implications to Shui Mei Road.

6.2.3 Therefore, it can be concluded that the Proposed Open Storage is considered acceptable in view of traffic engineering.

FIGURES

Rev.	Description	Checked	Date
-	-	-	-
-	-	-	-
-	-	-	-
-	-	-	-

Project Title

SECTION 16 PLANNING APPLICATION FOR PROPOSED TEMPORARY OPEN STORAGE OF MODULAR INTEGRATED CONSTRUCTION (MIC) COMPONENTS AND CONSTRUCTION MATERIALS WITH ANCILLARY WORKSHOPS, OFFICE, STAFF CAR PARK AND MACHINERY FOR A PERIOD OF 3 YEARS AT VARIOUS LOTS IN D.D. 107, SHA PO, YUEN LONG, NEW TERRITORIES

Drawing Title

SITE LOCATION

Designed	Checked	Scale	Date	Drawing No.	Rev.
TSO	LHW	NTS	DEC 2023	1.1	-

SYSTRA MVA

CHK50769210/TIA/F11.CDR/LLH/12DEC23

Original Size : A3

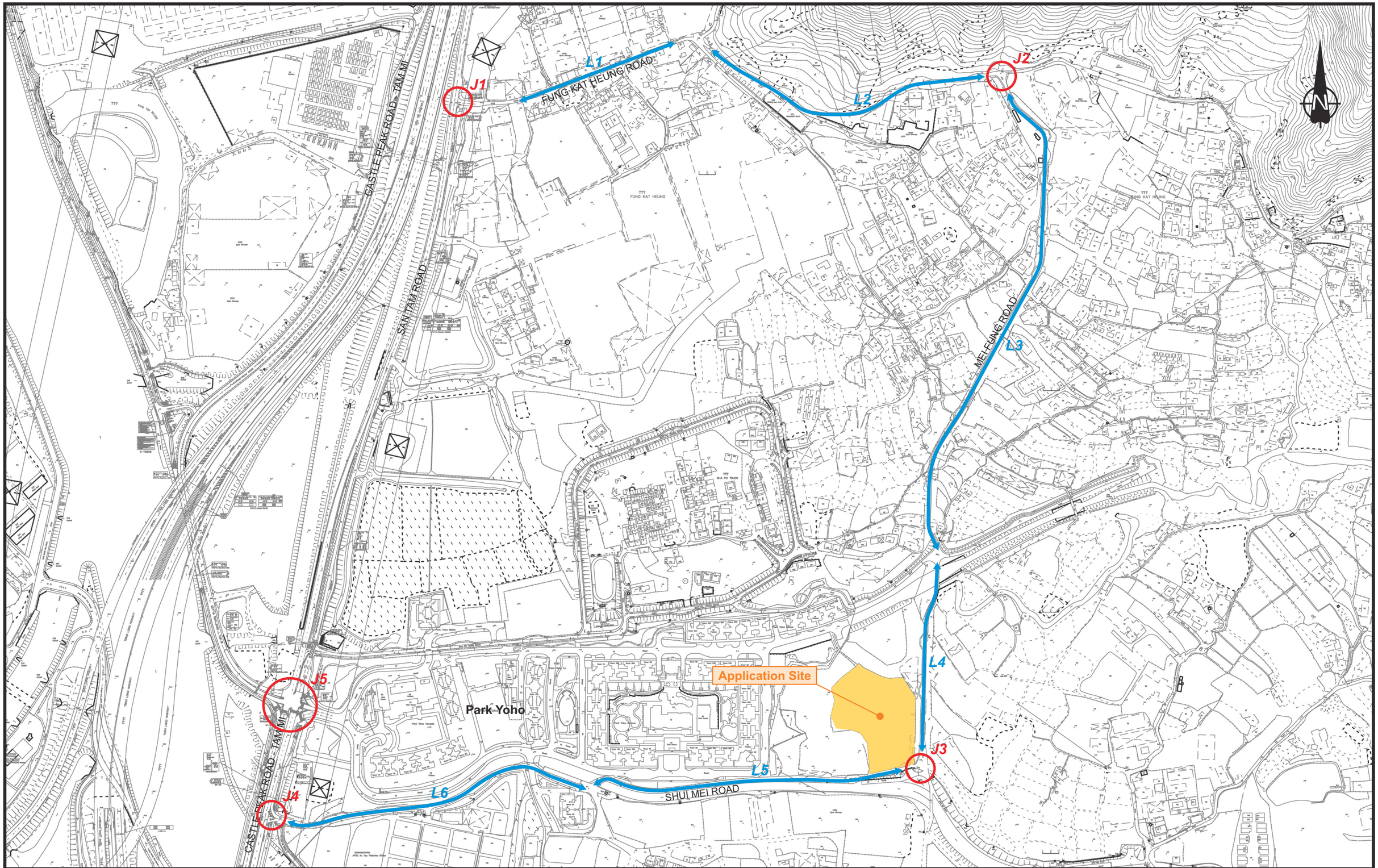

Rev.	Description	Checked	Date
-	-	-	-
-	-	-	-
-	-	-	-
-	-	-	-

Project Title
SECTION 16 PLANNING APPLICATION FOR PROPOSED TEMPORARY OPEN STORAGE OF MODULAR INTEGRATED CONSTRUCTION (MIC) COMPONENTS AND CONSTRUCTION MATERIALS WITH ANCILLARY WORKSHOPS, OFFICE, STAFF CAR PARK AND MACHINERY FOR A PERIOD OF 3 YEARS AT VARIOUS LOTS IN D.D. 107, SHA PO, YUEN LONG, NEW TERRITORIES

Drawing Title
EXISTING ROAD NETWORK

Designed	Checked	Scale	Date	Drawing No.	Rev.
TSO	LHW	NTS	DEC 2023	2.1	-

SYSTRA MVA

CHK50769210/TIA/F21.CDR/LLH/12DEC23

Original Size : A3

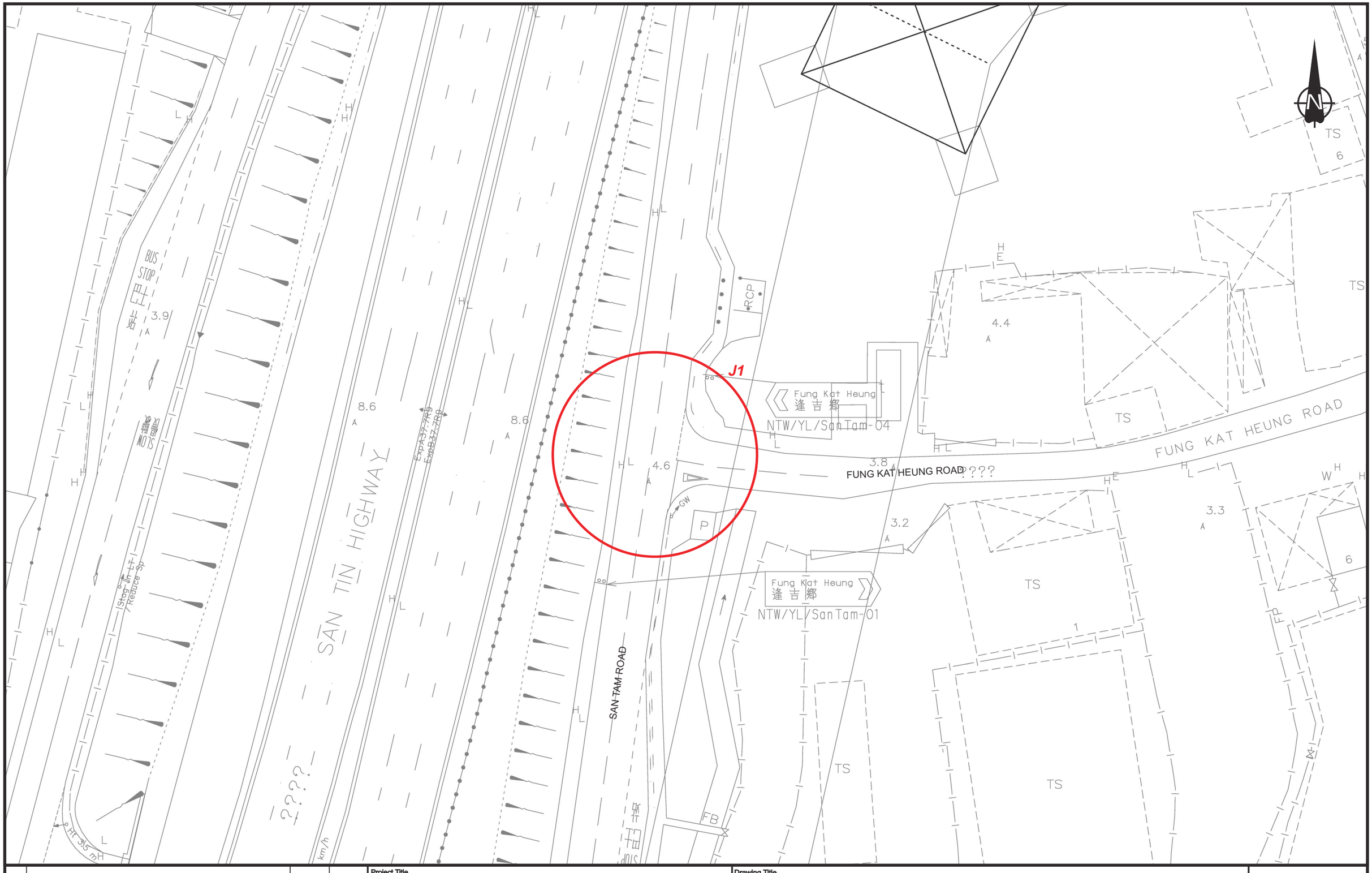

Rev.	Description	Checked	Date
-	-	-	-
-	-	-	-
-	-	-	-
-	-	-	-

Project Title

SECTION 16 PLANNING APPLICATION FOR PROPOSED TEMPORARY OPEN STORAGE OF MODULAR INTEGRATED CONSTRUCTION (MIC) COMPONENTS AND CONSTRUCTION MATERIALS WITH ANCILLARY WORKSHOPS, OFFICE, STAFF CAR PARK AND MACHINERY FOR A PERIOD OF 3 YEARS AT VARIOUS LOTS IN D.D. 107, SHA PO, YUEN LONG, NEW TERRITORIES

Drawing Title

JUNCTION LAYOUT OF SAN TAM ROAD / FUNG KAT HEUNG ROAD (J1)

Designed	Checked	Scale	Date	Drawing No.	Rev.
TSO	LHW	NTS	DEC 2023	2.2	-

SYSTRA MVA

CHK50769210/TIA/F22.CDR/LLH/11DEC23

Original Size : A3

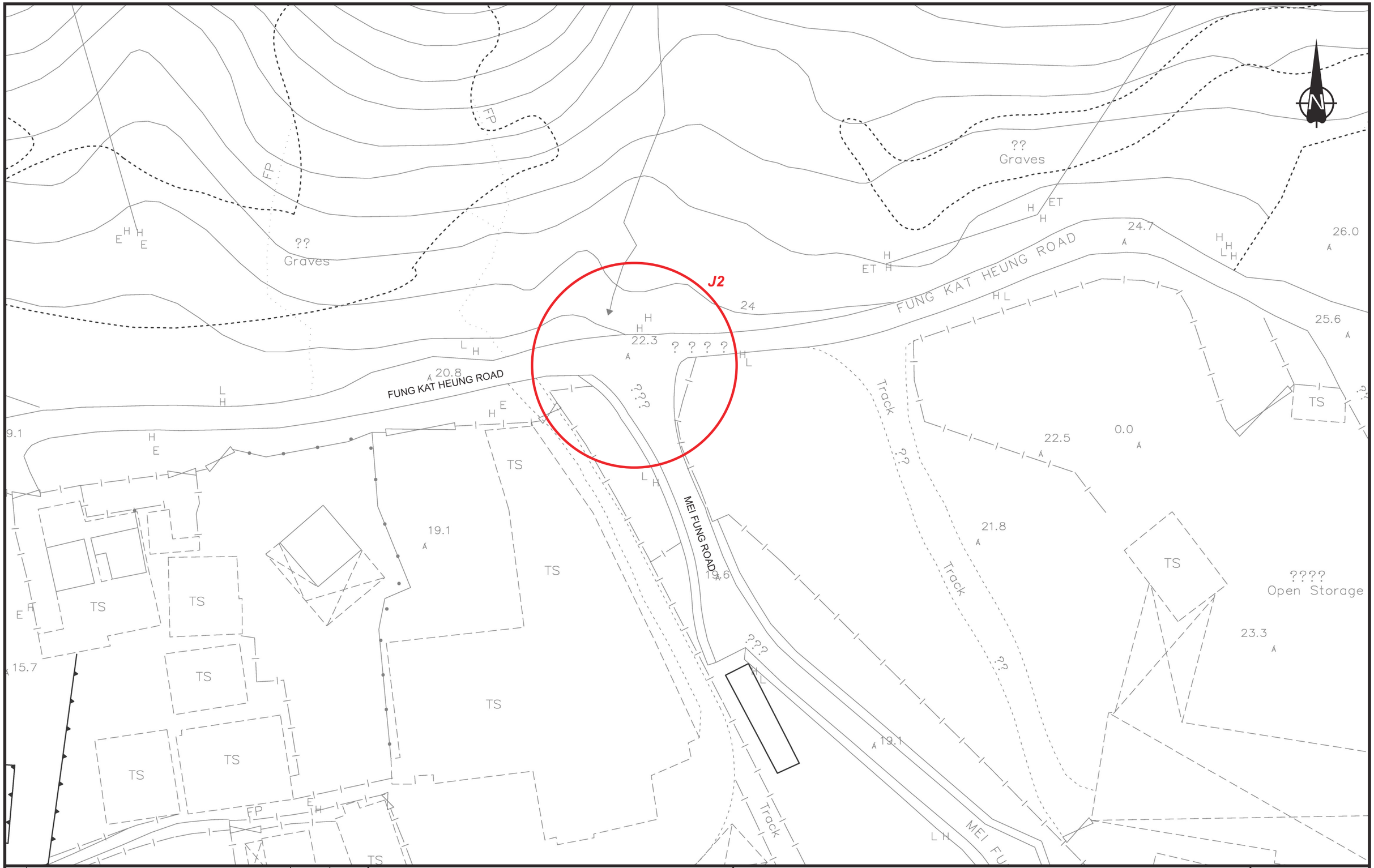

Rev.	Description	Checked	Date
-	-	-	-
-	-	-	-
-	-	-	-
-	-	-	-

Project Title

SECTION 16 PLANNING APPLICATION FOR PROPOSED TEMPORARY OPEN STORAGE OF MODULAR INTEGRATED CONSTRUCTION (MIC) COMPONENTS AND CONSTRUCTION MATERIALS WITH ANCILLARY WORKSHOPS, OFFICE, STAFF CAR PARK AND MACHINERY FOR A PERIOD OF 3 YEARS AT VARIOUS LOTS IN D.D. 107, SHA PO, YUEN LONG, NEW TERRITORIES

Drawing Title

JUNCTION LAYOUT OF FUNG KAT HEUNG ROAD / MEI FUNG ROAD (J2)

Designed	Checked	Scale	Date	Drawing No.	Rev.
TSO	LHW	NTS	DEC 2023	2.3	-

SYSTRA MVA

CHK50769210/TIA/F23.CDR/LLH/11DEC23

Original Size : A3

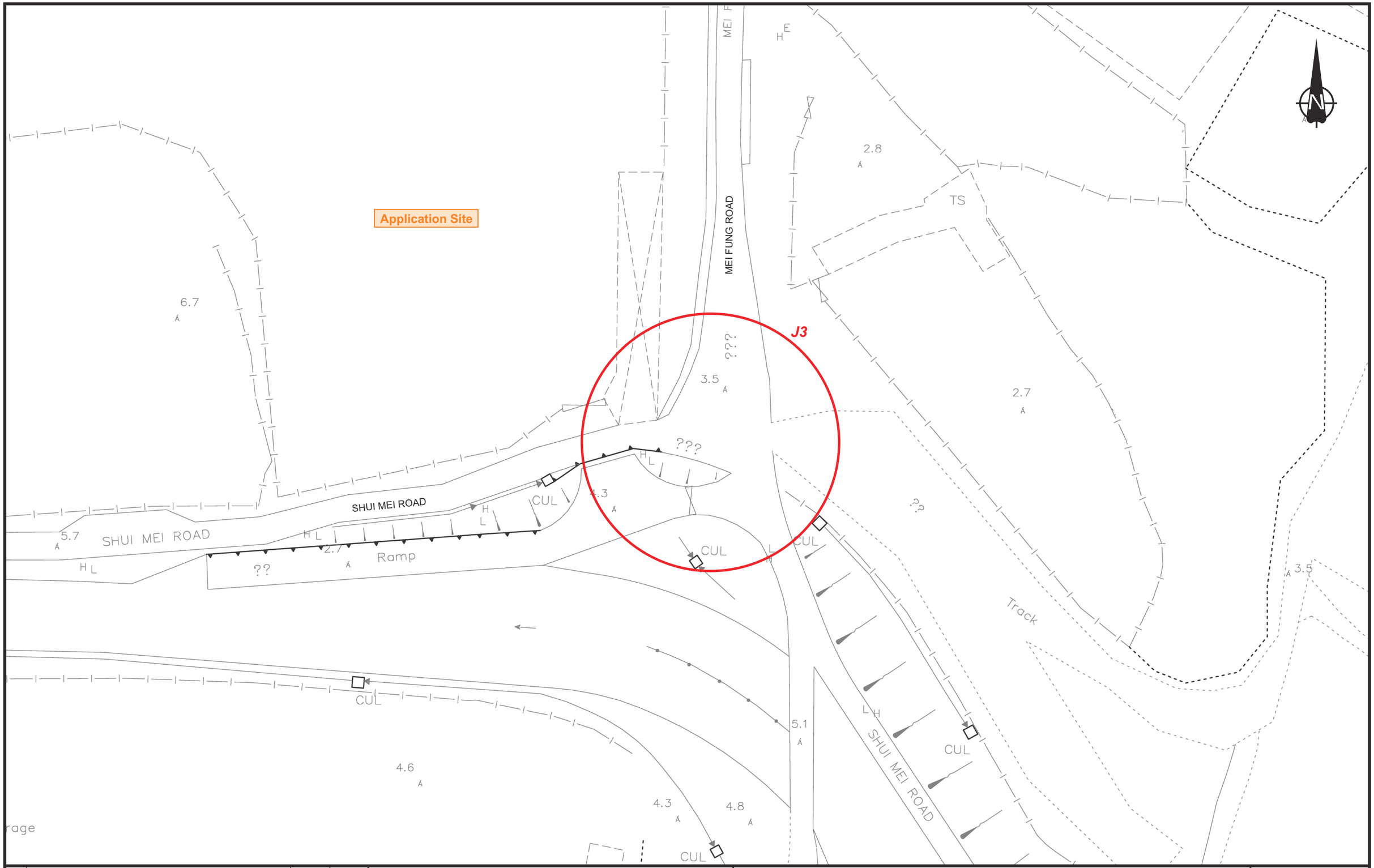

Rev.	Description	Checked	Date
-	-	-	-
-	-	-	-
-	-	-	-
-	-	-	-

Project Title

SECTION 16 PLANNING APPLICATION FOR PROPOSED TEMPORARY OPEN STORAGE OF MODULAR INTEGRATED CONSTRUCTION (MIC) COMPONENTS AND CONSTRUCTION MATERIALS WITH ANCILLARY WORKSHOPS, OFFICE, STAFF CAR PARK AND MACHINERY FOR A PERIOD OF 3 YEARS AT VARIOUS LOTS IN D.D. 107, SHA PO, YUEN LONG, NEW TERRITORIES

Drawing Title

JUNCTION LAYOUT OF MEI FUNG ROAD / SHUI MEI ROAD (J3)

Designed	Checked	Scale	Date	Drawing No.	Rev.
TSO	LHW	NTS	DEC 2023	2.4	-

SYSTRA MVA

CHK50769210/TIA/F24.CDR/LLH/11DEC23

Original Size : A3

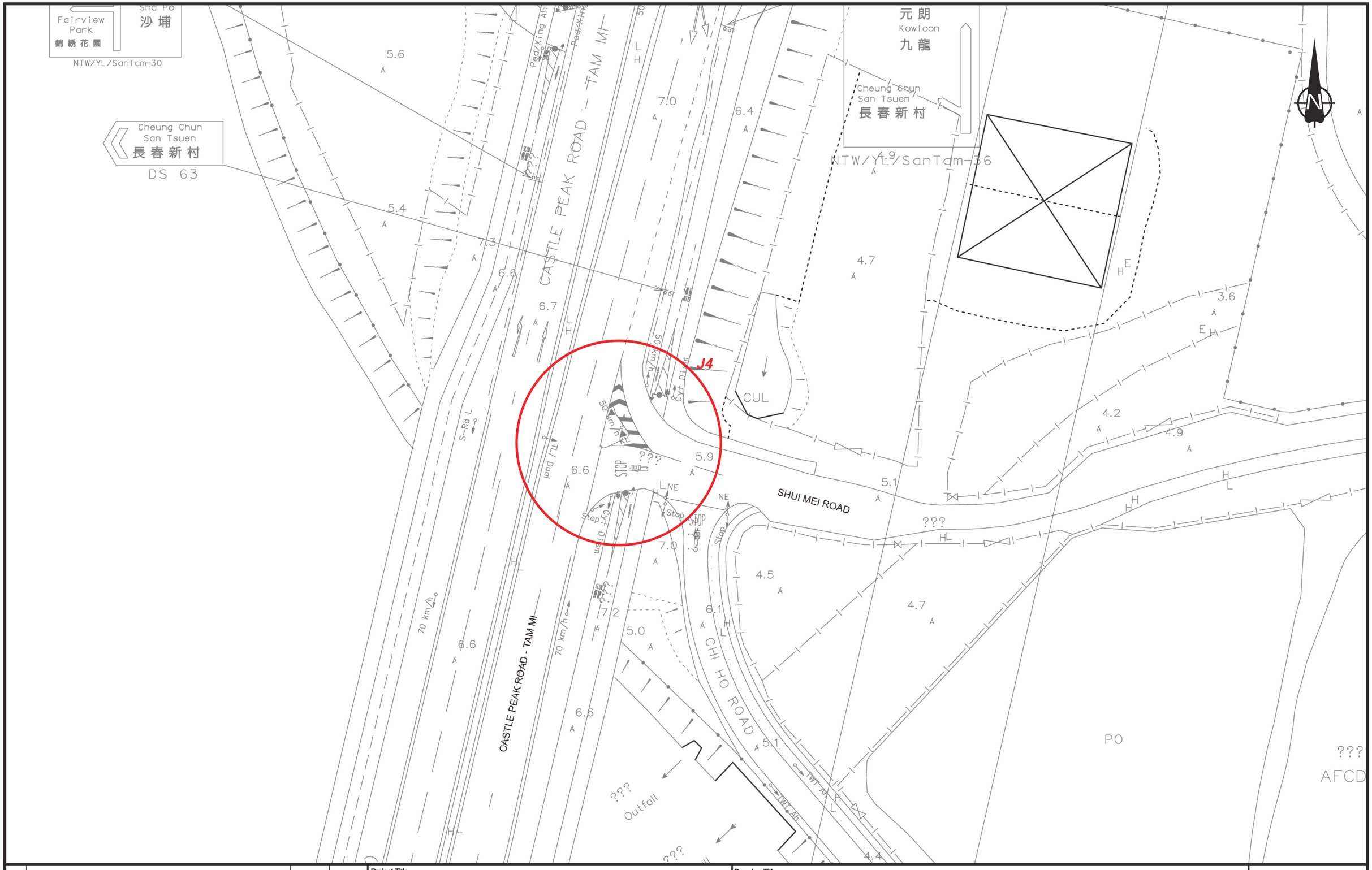

Rev.	Description	Checked	Date
-	-	-	-
-	-	-	-
-	-	-	-
-	-	-	-

Project Title

SECTION 16 PLANNING APPLICATION FOR PROPOSED TEMPORARY OPEN STORAGE OF MODULAR INTEGRATED CONSTRUCTION (MIC) COMPONENTS AND CONSTRUCTION MATERIALS WITH ANCILLARY WORKSHOPS, OFFICE, STAFF CAR PARK AND MACHINERY FOR A PERIOD OF 3 YEARS AT VARIOUS LOTS IN D.D. 107, SHA PO, YUEN LONG, NEW TERRITORIES

Drawing Title

JUNCTION LAYOUT OF SHUI MEI ROAD / CASTLE PEAK ROAD – TAM MI (J4)

Designed	Checked	Scale	Date	Drawing No.	Rev.
TSO	LHW	NTS	DEC 2023	2.5	-

SYSTRA MVA

CHK50769210/TIA/F25.CDR/LLH/11DEC23

Original Size : A3

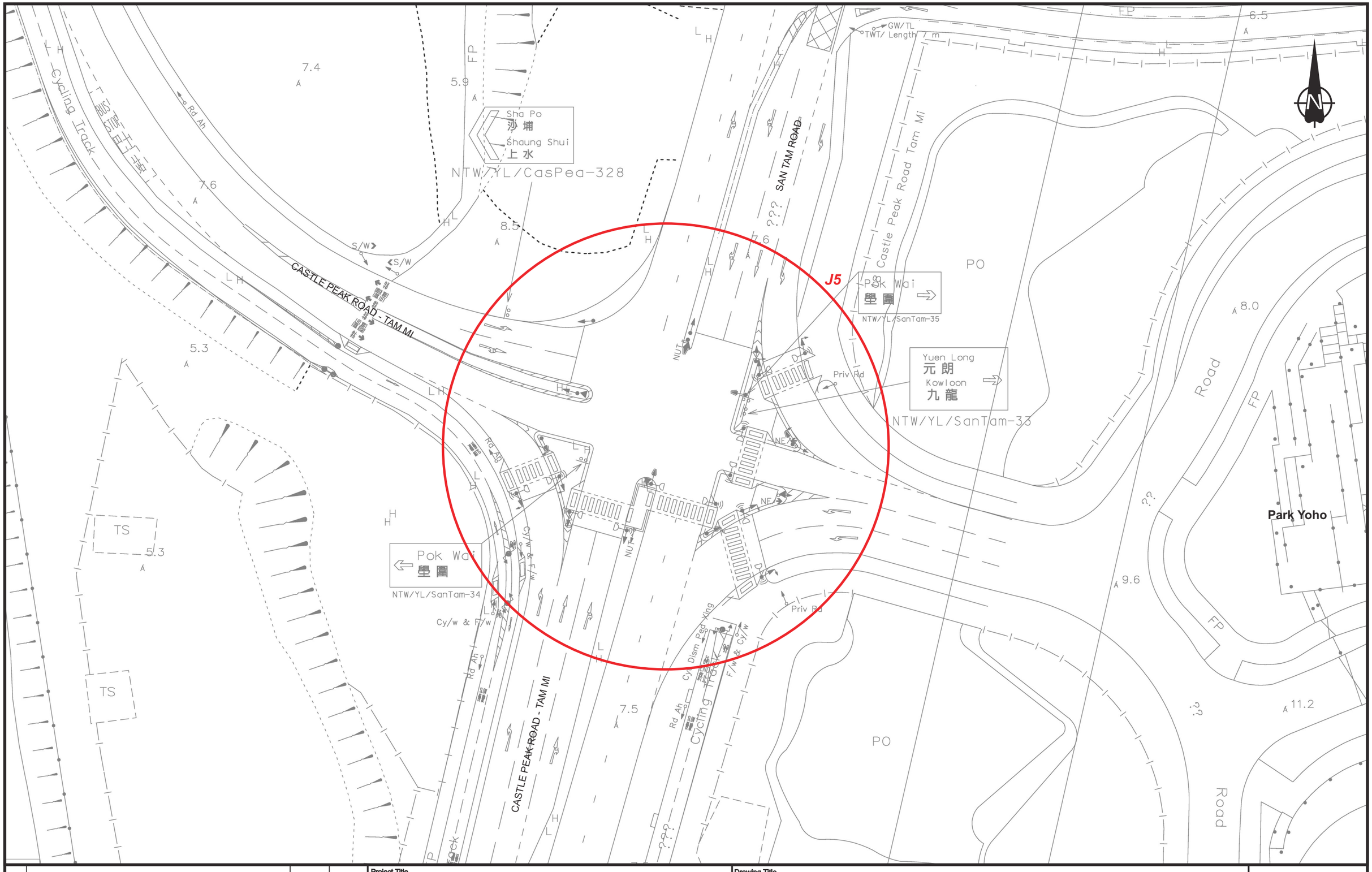

Rev.	Description	Checked	Date
-	-	-	-
-	-	-	-
-	-	-	-
-	-	-	-

Project Title

SECTION 16 PLANNING APPLICATION FOR PROPOSED TEMPORARY OPEN STORAGE OF MODULAR INTEGRATED CONSTRUCTION (MIC) COMPONENTS AND CONSTRUCTION MATERIALS WITH ANCILLARY WORKSHOPS, OFFICE, STAFF CAR PARK AND MACHINERY FOR A PERIOD OF 3 YEARS AT VARIOUS LOTS IN D.D. 107, SHA PO, YUEN LONG, NEW TERRITORIES

Drawing Title

JUNCTION LAYOUT OF SAN TAM ROAD / CASTLE PEAK ROAD – TAM MI (J5)

Designed	Checked	Scale	Date	Drawing No.	Rev.
TSO	LHW	NTS	DEC 2023	2.6	-

SYSTRA MVA

CHK50769210/TIA/F26.CDR/LLH/11DEC23

Original Size : A3

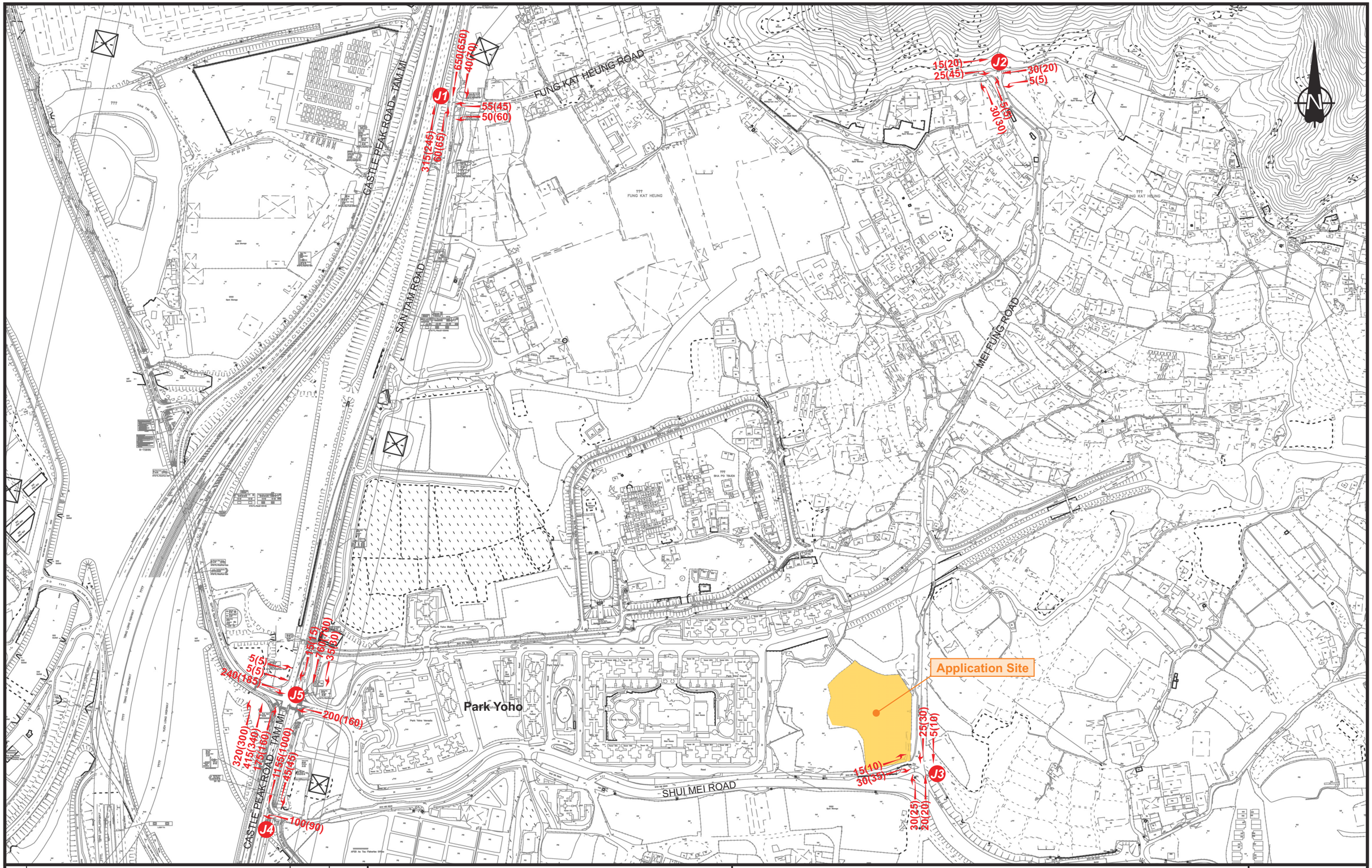

Rev.	Description	Checked	Date
-	-	-	-
-	-	-	-
-	-	-	-
-	-	-	-

Project Title
SECTION 16 PLANNING APPLICATION FOR PROPOSED TEMPORARY OPEN STORAGE OF MODULAR INTEGRATED CONSTRUCTION (MIC) COMPONENTS AND CONSTRUCTION MATERIALS WITH ANCILLARY WORKSHOPS, OFFICE, STAFF CAR PARK AND MACHINERY FOR A PERIOD OF 3 YEARS AT VARIOUS LOTS IN D.D. 107, SHA PO, YUEN LONG, NEW TERRITORIES

Drawing Title
OBSERVED TRAFFIC FLOWS (NOV 2023)

Designed	Checked	Scale	Date	Drawing No.	Rev.
TSO	LHW	NTS	DEC 2023	2.7	-

SYSTRA MVA

CHK50769210/TIA/F27.CDR/LLH/12DEC23

Original Size : A3

Bus Routes	Destinations		Bus Stops
KMB 68	Park Yoho	Yoho Mall II	(C)
KMB 68F	Park Yoho	Yuen Long Park	(C)
KMB 268M	Park Yoho	Tsuen Wan West Station	(C)
KMB 76K	Sheung Shui (Ching Ho)	Long Ping Estate	(A) (B)
CTB 976	Lok Ma Chau (San Tin)	Sai Wan Ho	(A) (B)
CTB 976A	Lok Ma Chau (San Tin)	Siu Sai Wan	(A) (B)

GMB Route	Destinations		Bus Stops
GMB 36	Tai Shang Wai	Yuen Long (Fook Hong Street)	(A) (B)
GMB 37	Yau Tam Mei	Yuen Long (Fook Hong Street)	(A) (B)
GMB 38	Ha Chuk Yuen	Yuen Long (Fook Hong Street)	(A) (B)
GMB 75	Ha Wan Tsuen	Yuen Long (Fook Hong Street)	(A) (B)
GMB 76	Siu Hum Tsuen	Yuen Long (Fook Hong Street)	(A) (B)
GMB 78	Lok Ma Chau (San Tin)	Pat Heung Road	(A) (B)
GMB 603	Fung Kat Heung	Yuen Long (Fung Cheung Road)	(A) (B)
GMB 620	Park Yoho	Kam Sheung Road Station	(C)

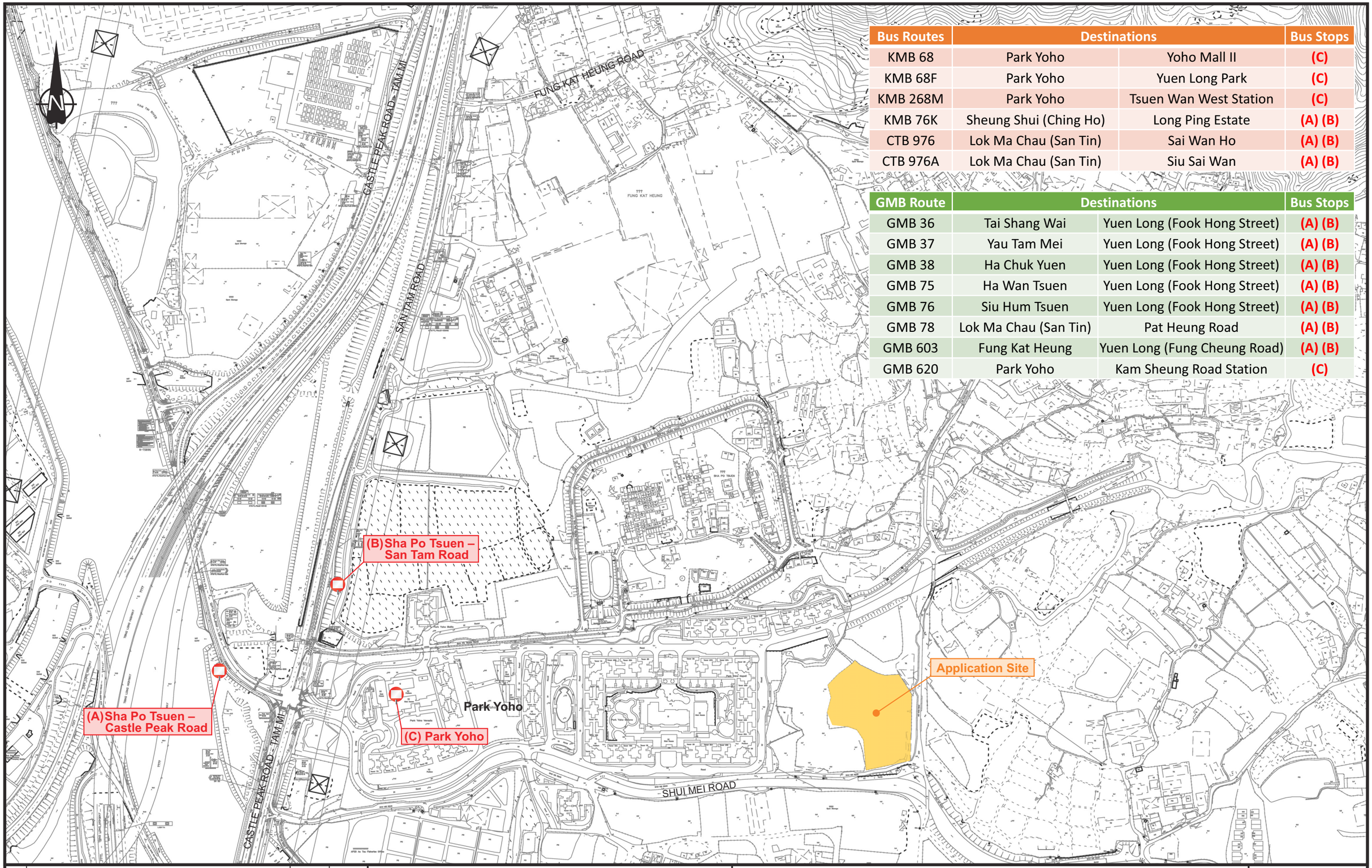

Rev.	Description	Checked	Date
-	-	-	-
-	-	-	-
-	-	-	-
-	-	-	-

Project Title

SECTION 16 PLANNING APPLICATION FOR PROPOSED TEMPORARY OPEN STORAGE OF MODULAR INTEGRATED CONSTRUCTION (MIC) COMPONENTS AND CONSTRUCTION MATERIALS WITH ANCILLARY WORKSHOPS, OFFICE, STAFF CAR PARK AND MACHINERY FOR A PERIOD OF 3 YEARS AT VARIOUS LOTS IN D.D. 107, SHA PO, YUEN LONG, NEW TERRITORIES

Drawing Title

AVAILABILITY OF PUBLIC TRANSPORT SERVICES

Designed	Checked	Scale	Date	Drawing No.	Rev.
TSO	LHW	NTS	DEC 2023	2.8	-

SYSTRA MVA

CHK50769210/TIA/F28.CDR/LLH/12DEC23

Original Size : A3

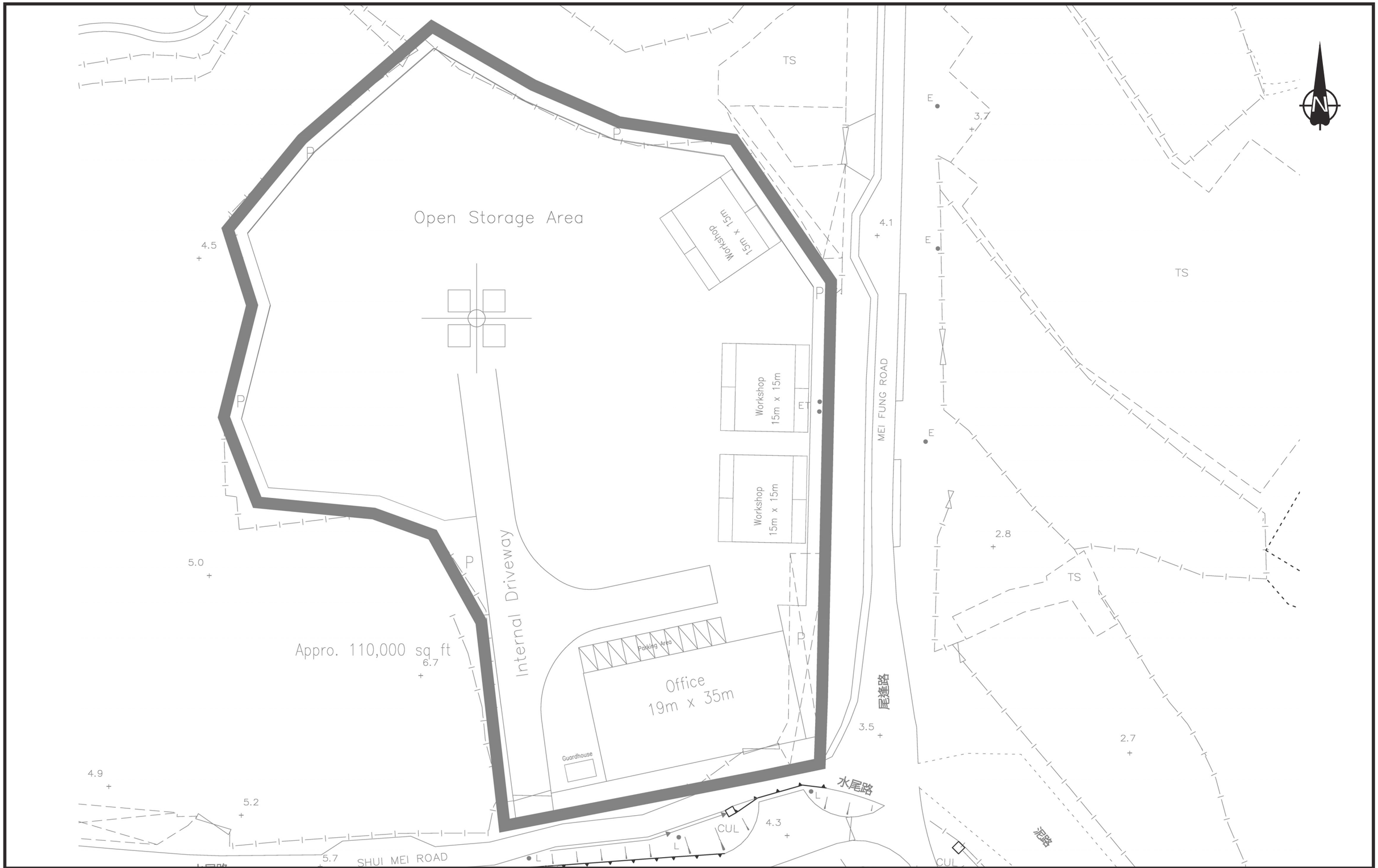

Rev.	Description	Checked	Date
-	-	-	-
-	-	-	-
-	-	-	-
-	-	-	-

Project Title

SECTION 16 PLANNING APPLICATION FOR PROPOSED TEMPORARY OPEN STORAGE OF MODULAR INTEGRATED CONSTRUCTION (MIC) COMPONENTS AND CONSTRUCTION MATERIALS WITH ANCILLARY WORKSHOPS, OFFICE, STAFF CAR PARK AND MACHINERY FOR A PERIOD OF 3 YEARS AT VARIOUS LOTS IN D.D. 107, SHA PO, YUEN LONG, NEW TERRITORIES

Drawing Title

INDICATIVE LAYOUT PLAN

Designed	Checked	Scale	Date	Drawing No.	Rev.
TSO	LHW	NTS	DEC 2023	3.1	-

SYSTRA MVA

CHK50769210/TIA/F31.CDR/LLH/11DEC23

Original Size : A3

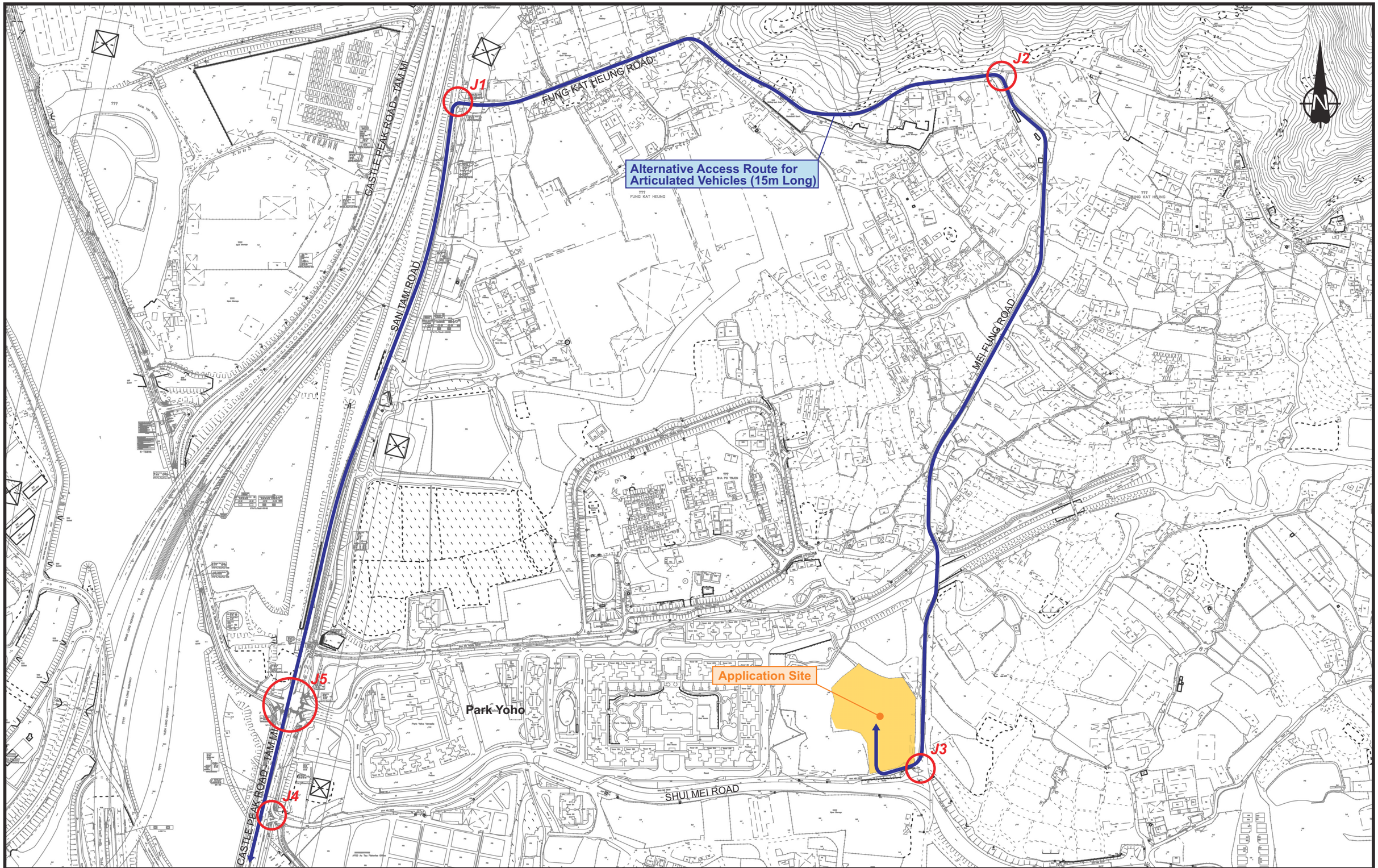

Rev.	Description	Checked	Date
-	-	-	-
-	-	-	-
-	-	-	-
-	-	-	-

Project Title

SECTION 16 PLANNING APPLICATION FOR PROPOSED TEMPORARY OPEN STORAGE OF MODULAR INTEGRATED CONSTRUCTION (MIC) COMPONENTS AND CONSTRUCTION MATERIALS WITH ANCILLARY WORKSHOPS, OFFICE, STAFF CAR PARK AND MACHINERY FOR A PERIOD OF 3 YEARS AT VARIOUS LOTS IN D.D. 107, SHA PO, YUEN LONG, NEW TERRITORIES

Drawing Title

INGRESS AND EGRESS ROUTES

Designed	Checked	Scale	Date	Drawing No.	Rev.
TSO	LHW	NTS	DEC 2023	3.2	-

SYSTRA MVA

CHK50769210/TIA/F32.CDR/LLH/12DEC23

Original Size : A3

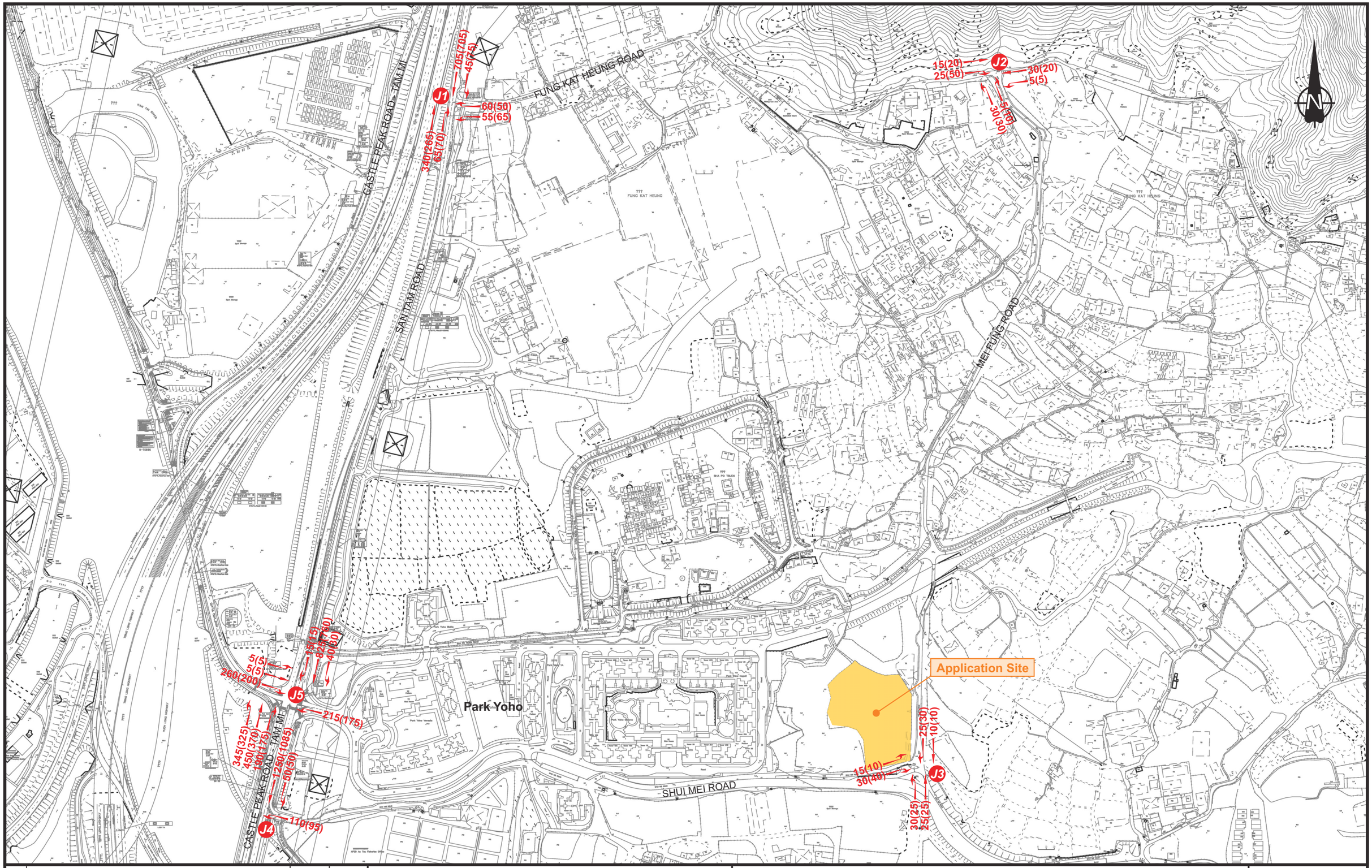

Rev.	Description	Checked	Date
-	-	-	-
-	-	-	-
-	-	-	-
-	-	-	-

Project Title

SECTION 16 PLANNING APPLICATION FOR PROPOSED TEMPORARY OPEN STORAGE OF MODULAR INTEGRATED CONSTRUCTION (MIC) COMPONENTS AND CONSTRUCTION MATERIALS WITH ANCILLARY WORKSHOPS, OFFICE, STAFF CAR PARK AND MACHINERY FOR A PERIOD OF 3 YEARS AT VARIOUS LOTS IN D.D. 107, SHA PO, YUEN LONG, NEW TERRITORIES

Drawing Title

2027 REFERENCE TRAFFIC FLOWS

Designed	Checked	Scale	Date	Drawing No.	Rev.
TSO	LHW	NTS	DEC 2023	4.1	-

SYSTRA MVA

CHK50769210/TIA/F41.CDR/LLH/12DEC23

Original Size : A3

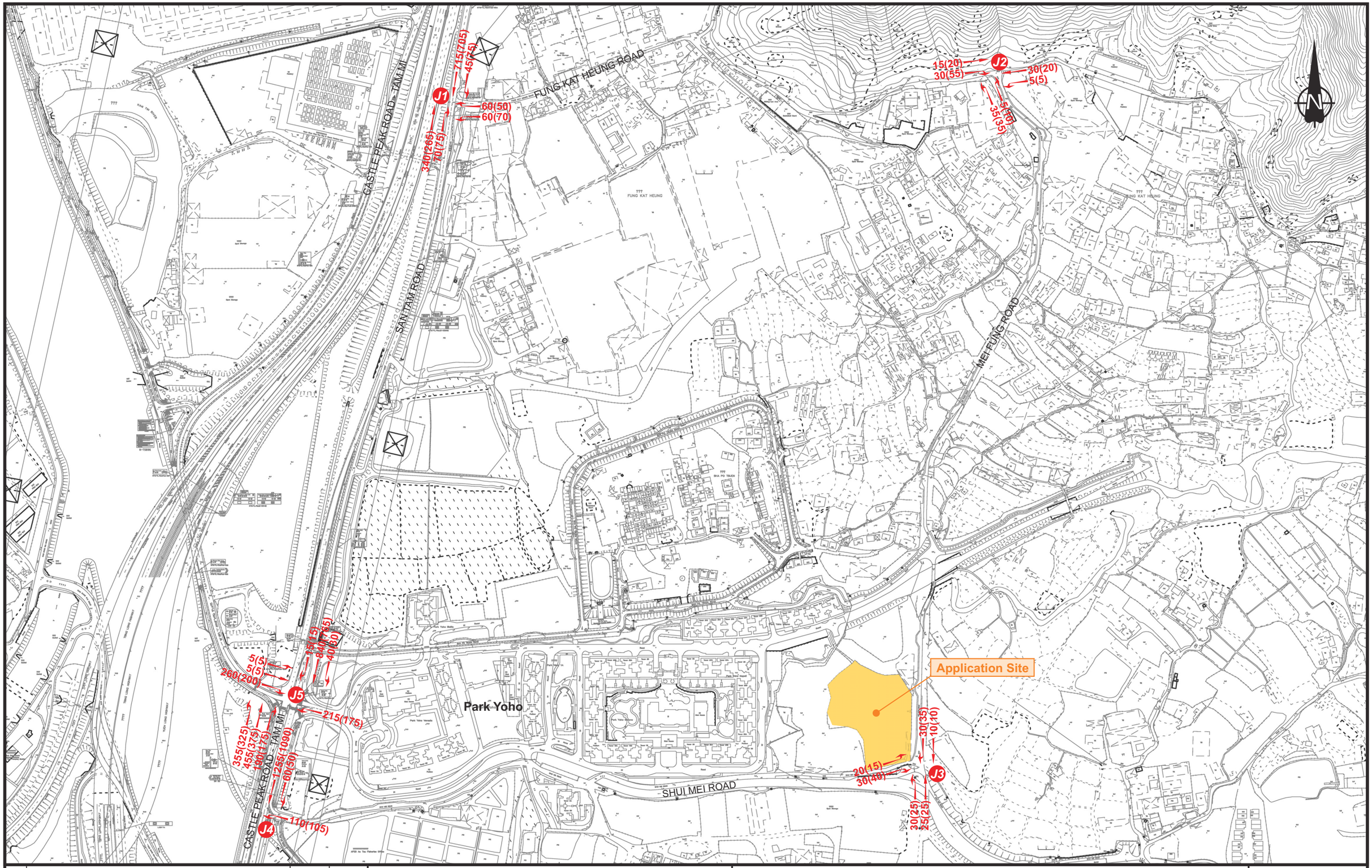

Rev.	Description	Checked	Date
-	-	-	-
-	-	-	-
-	-	-	-
-	-	-	-

Project Title
SECTION 16 PLANNING APPLICATION FOR PROPOSED TEMPORARY OPEN STORAGE OF MODULAR INTEGRATED CONSTRUCTION (MIC) COMPONENTS AND CONSTRUCTION MATERIALS WITH ANCILLARY WORKSHOPS, OFFICE, STAFF CAR PARK AND MACHINERY FOR A PERIOD OF 3 YEARS AT VARIOUS LOTS IN D.D. 107, SHA PO, YUEN LONG, NEW TERRITORIES

Drawing Title
2027 DESIGN TRAFFIC FLOWS

Designed	Checked	Scale	Date	Drawing No.	Rev.
TSO	LHW	NTS	DEC 2023	4.2	-

SYSTRA MVA

CHK50769210/TIA/F42.CDR/LLH/12DEC23

Original Size : A3

APPENDIX A

CALCULATION DETAILS

Simplified Priority Junction Capacity Calculation

Job Title:	Section 16 Planning Application for Proposed Temporary Workshop and Storage Yard		
Junction:	Castle Peak Road - Tam Mei / Fung Kat Heung Road	Designed by:	TSO
Scheme:	Observed	Checked by:	LHW
Design Year:	2023	Job No.: CHK50769210	Date: Dec-23
Arm A:	Castle Peak Road - Tam Mei (Southbound)		
Arm B:	Fung Kat Heung Road		
Arm C:	Castle Peak Road - Tam Mei (Northbound)		

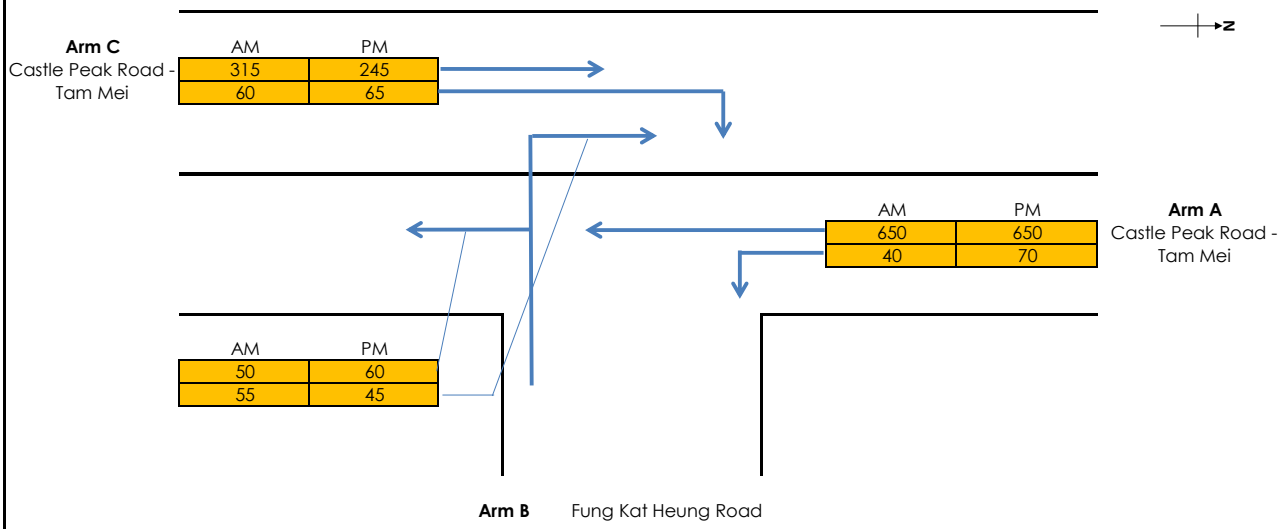

GEOMETRY

Major Road Width (m)	W	7.00	Lane widths (m)	w(b-a)	2.80
Central Reserve Width (m)	Wcr	0.00		w(b-c)	2.80
Blockage of major road right turn	Y/N?	N		w(c-b)	3.50
Combined stream on minor arm	Y/N?	Y			
Visibility Distances (m)	Vr(b-a)	60	Calculated Parameters	D	0.834
	Vl(b-a)	80		E	0.87
	Vr(b-c)	60		F	0.959
	Vr(c-b)	90		Y	0.759

ANALYSIS		**AM PEAK**	**PM PEAK**
TRAFFIC FLOWS (pcu/hr)	q(c-a)	315	245
	q(c-b)	60	65
	q(a-b)	40	70
	q(a-c)	650	650
	q(b-a)	55	45
	q(b-c)	50	60
	f	0.48	0.57
CAPACITIES (pcu/hr)	Q(b-ac)	370.793	390.7
	Q(c-b)	531.916	524
RFC's	c-b	0.11	0.12
	b-ac	0.28	0.27
RFC		**0.28**	**0.27**

Where Vl and Vr are visibility distances to the left or right of the respective streams
D = (1+0.094(w(b-a)-3.65))(1+0.0009(Vr(b-a)-120))(1+0.0006(Vl(b-a)-150))
E = (1+0.094(w(b-c)-3.65))(1+0.0009(Vr(b-c)-120))
F = (1+0.094(wc-b)-3.65))(1+0.0009(Vr(c-b)-120))
Y = 1-0.0345W
f = proportion of minor traffic turning left
Q(b-ac) = Q(b-c)*Q(b-a)/(1-f)*Q(b-c)+f*Q(b-a) Capacity of combined streams

All the above formulas are in accordance to T.P.D.M. Volume 2 Chapter 4 Appendix 1

Simplified Priority Junction Capacity Calculation

Job Title:	Section 16 Planning Application for Proposed Temporary Workshop and Storage Yard		
Junction:	Fung Kat Heung Road / Mei Fung Road	Designed by:	TSO
Scheme:	Observed	Checked by:	LHW
Design Year:	2023 Job No.: CHK50769210	Date:	Dec-23
Arm A:	Fung Kat Heung Road (Westbound)		
Arm B:	Mei Fung Road		
Arm C:	Fung Kat Heung Road (Eastbound)		

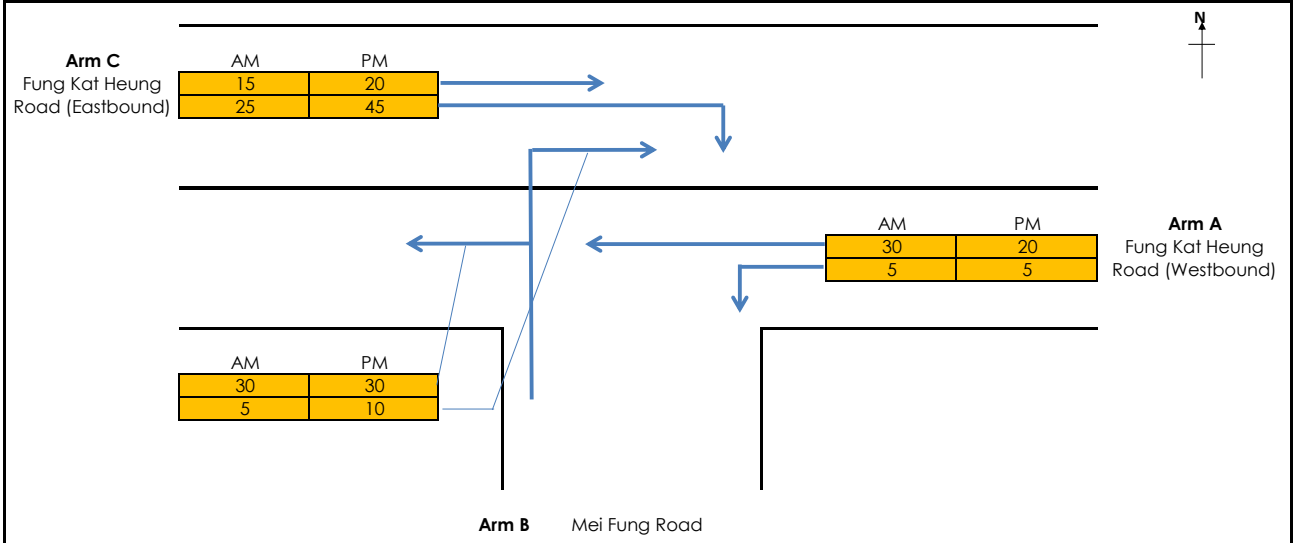

GEOMETRY

Major Road Width (m)	W	3.00	Lane widths (m)	w(b-a)	4.00
Central Reserve Width (m)	Wcr	0.00		w(b-c)	4.00
Blockage of major road right turn	Y/N?	N		w(c-b)	3.00
Combined stream on minor arm	Y/N?	Y			
Visibility Distances (m)	Vr(b-a)	60	Calculated	D	0.936
	Vl(b-a)	80	Parameters	E	0.977
	Vr(b-c)	60		F	0.914
	Vr(c-b)	90		Y	0.897

ANALYSIS		**AM PEAK**	**PM PEAK**
TRAFFIC FLOWS (pcu/hr)	q(c-a)	15	20
	q(c-b)	25	45
	q(a-b)	5	5
	q(a-c)	30	20
	q(b-a)	5	10
	q(b-c)	30	30
	f	0.86	0.75
CAPACITIES (pcu/hr)	Q(b-ac)	690.718	671.4
	Q(c-b)	670.161	673.1
RFC's	c-b	0.04	0.07
	b-ac	0.05	0.06
RFC		**0.05**	**0.07**

Where Vl and Vr are visibility distances to the left or right of the respective streams
D = (1+0.094(w(b-a)-3.65))(1+0.0009(Vr(b-a)-120))(1+0.0006(Vl(b-a)-150))
E = (1+0.094(w(b-c)-3.65))(1+0.0009(Vr(b-c)-120))
F = (1+0.094(wc-b)-3.65))(1+0.0009(Vr(c-b)-120))
Y = 1-0.0345W
f = proportion of minor traffic turning left
Q(b-ac) = Q(b-c)*Q(b-a)/(1-f)*Q(b-c)+f*Q(b-a) Capacity of combined streams

All the above formulas are in accordance to T.P.D.M. Volume 2 Chapter 4 Appendix 1

Simplified Priority Junction Capacity Calculation

Job Title:	Section 16 Planning Application for Proposed Temporary Workshop and Storage Yard		
Junction:	Shui Mei Road / Mei Fung Road	Designed by:	TSO
Scheme:	Observed	Checked by:	LHW
Design Year:	2023	Job No.: CHK50769210	Date: Dec-23
Arm A:	Shui Mei Road (Eastbound)		
Arm B:	Mei Fung Road		
Arm C:	Shui Mei Road (Westbound)		

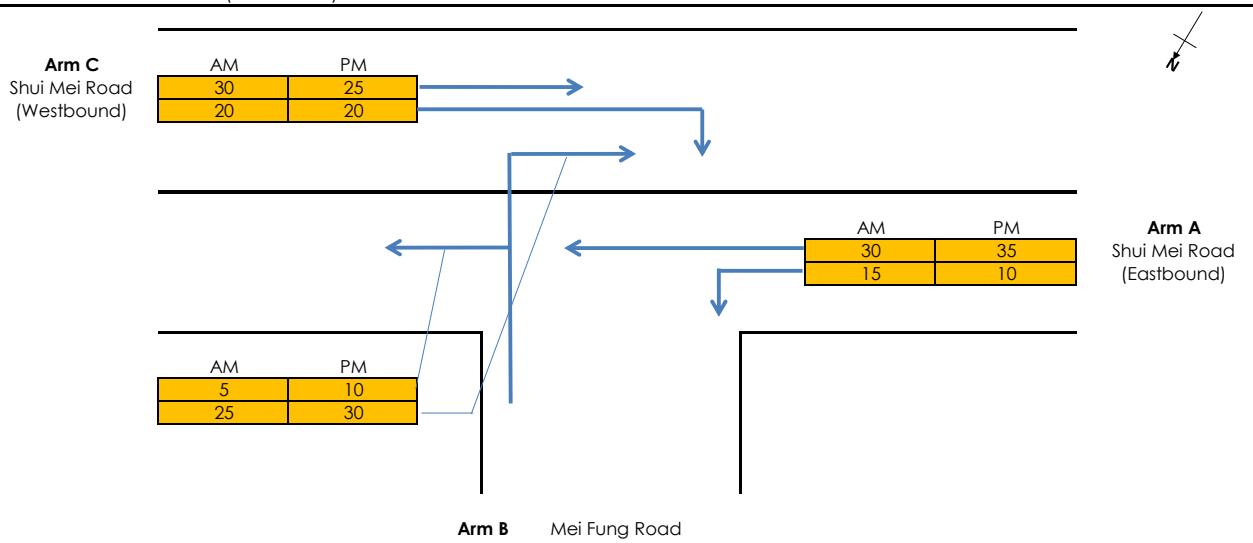

GEOMETRY

Major Road Width (m)	W	14.00	Lane widths (m)	w(b-a)	7.00
Central Reserve Width (m)	Wcr	0.00		w(b-c)	7.00
Blockage of major road right turn	Y/N?	N		w(c-b)	7.00
Combined stream on minor arm	Y/N?	Y			
Visibility Distances (m)	Vr(b-a)	35	Calculated Parameters	D	1.178
	Vl(b-a)	100		E	1.214
	Vr(b-c)	35		F	1.193
	Vr(c-b)	17		Y	0.517

ANALYSIS		**AM PEAK**	**PM PEAK**
TRAFFIC FLOWS (pcu/hr)	q(c-a)	30	25
	q(c-b)	20	20
	q(a-b)	15	10
	q(a-c)	30	35
	q(b-a)	25	30
	q(b-c)	5	10
	f	0.17	0.25
CAPACITIES (pcu/hr)	Q(b-ac)	744.465	757.2
	Q(c-b)	878.689	878.7
RFC's	c-b	0.02	0.02
	b-ac	0.04	0.05
RFC		**0.04**	**0.05**

Where Vl and Vr are visibility distances to the left or right of the respective streams
D = (1+0.094(w(b-a)-3.65))(1+0.0009(Vr(b-a)-120))(1+0.0006(Vl(b-a)-150))
E = (1+0.094(w(b-c)-3.65))(1+0.0009(Vr(b-c)-120))
F = (1+0.094(wc-b)-3.65))(1+0.0009(Vr(c-b)-120))
Y = 1-0.0345W
f = proportion of minor traffic turning left
Q(b-ac) = Q(b-c)*Q(b-a)/(1-f)*Q(b-c)+f*Q(b-a) Capacity of combined streams

All the above formulas are in accordance to T.P.D.M. Volume 2 Chapter 4 Appendix 1

Simplified Priority Junction Capacity Calculation

Job Title:	Section 16 Planning Application for Proposed Temporary Workshop and Storage Yard		
Junction:	Castle Peak Road - Tam Mei / Shui Mei Road	Designed by:	TSO
Scheme:	Observed	Checked by:	LHW
Design Year:	2023	Job No.: CHK50769210	Date: Dec-23
Arm A:	Castle Peak Road - Tam Mei (Southbound)		
Arm B:	Shui Mei Road		
Arm C:	Castle Peak Road - Tam Mei (Northbound)		

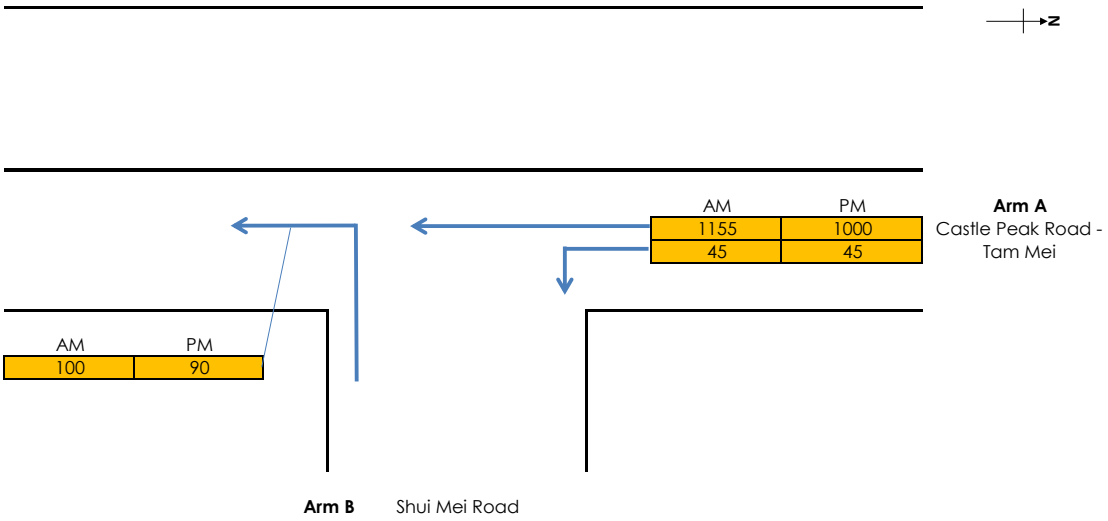

GEOMETRY

Major Road Width (m)	W	8.00	Lane widths (m)	w(b-a)	5.50
Central Reserve Width (m)	Wcr	4.00		w(b-c)	4.80
Blockage of major road right turn	Y/N?	N			
Combined stream on minor arm	Y/N?	Y			
Visibility Distances (m)	Vr(b-a)	40	Calculated Parameters	D	1.037
	Vl(b-a)	70		E	1.028
	Vr(b-c)	40		F	0.616
	Vr(c-b)	50		Y	0.724

ANALYSIS		**AM PEAK**	**PM PEAK**
TRAFFIC FLOWS (pcu/hr)			
	q(a-b)	45	45
	q(a-c)	1155	1000
	q(b-c)	100	90
	f	1.00	1.00
CAPACITIES (pcu/hr)	Q(b-ac)	448.268	490.3
	Q(c-b)	263.906	289
RFC's			
	b-ac	0.22	0.18
RFC		**0.22**	**0.18**

Where Vl and Vr are visibility distances to the left or right of the respective streams
D = (1+0.094(w(b-a)-3.65))(1+0.0009(Vr(b-a)-120))(1+0.0006(Vl(b-a)-150))
E = (1+0.094(w(b-c)-3.65))(1+0.0009(Vr(b-c)-120))
F = (1+0.094(wc-b)-3.65))(1+0.0009(Vr(c-b)-120))
Y = 1-0.0345W
f = proportion of minor traffic turning left
Q(b-ac) = Q(b-c)*Q(b-a)/(1-f)*Q(b-c)+f*Q(b-a) Capacity of combined streams

All the above formulas are in accordance to T.P.D.M. Volume 2 Chapter 4 Appendix 1

TRAFFIC SIGNALS CALCULATION

Job No.: CHK50769210 **MVA HONG KONG LIMITED**

Junction: J5 - Castle Peak Road - Tam Mi/San Tam Road Design Year: 2023

Description: Observed 2023 Designed By: TSO Checked By: LHW

Approach	Movements	Phase	Stage	Width (m)	Radius (m) Left	Radius (m) Right	Gradient (%)	Pro. Turning (%) AM	Pro. Turning (%) PM	Revised Saturation Flow (pcu/hr) AM	Revised Saturation Flow (pcu/hr) PM	AM Peak Flow (pcu/hr)	AM Peak y Value	AM Peak Critical y	PM Peak Flow (pcu/hr)	PM Peak y Value	PM Peak Critical y
Western Access Road		D	2	3.500	70					2060	2060	104	0.050		83	0.040	
		D	2	3.500	65					1920	1920	96	0.050		77	0.040	
San Tam Road (SB)		E	3	6.000	58					2160	2160	35	0.016		30	0.014	
		E	3	4.000						2155	2155	391	0.181	0.181	360	0.167	
		E	3	3.700		30		4%	4%	2120	2120	384	0.181		355	0.167	0.167
Castle Peak Road - Tam Mi (EB)		A	1	3.500	28					1865	1865	5	0.003		5	0.003	
		A	1	3.500		20		98%	100%	1960	1960	245	0.125	0.125	185	0.094	0.094
Castle Peak Road - Tam Mi (NB)		B	1,2	3.650	60					1930	1930	320	0.166		300	0.155	
		C	2	3.650						2120	2120	299	0.141		254	0.120	0.120
		C	2	3.650		30		60%	65%	2060	2055	291	0.141	0.141	246	0.120	

Pedestrian Crossing								
	Fp	3	MIN GREEN + FLASH =	7	+	5	=	12
	Gp	1,2	MIN GREEN + FLASH =	29	+	5	=	34
	Hp	3,1	MIN GREEN + FLASH =	22	+	8	=	30
	Ip	3	MIN GREEN + FLASH =	7	+	5	=	12
	Jp	2	MIN GREEN + FLASH =	7	+	7	=	14
	Kp	3,1	MIN GREEN + FLASH =	25	+	7	=	32

Notes:

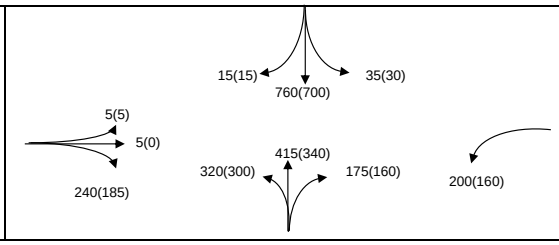

Group	A,D,E	A,C,E	Group	A,D,E	A,C,E
y	0.357	0.448	y	0.302	0.382
L (sec)	18	22	L (sec)	18	22
C (sec)	83	83	C (sec)	83	83
y pract.	0.705	0.661	y pract.	0.705	0.661
R.C. (%)	97%	48%	R.C. (%)	133%	73%

Stage / Phase Diagrams

1.

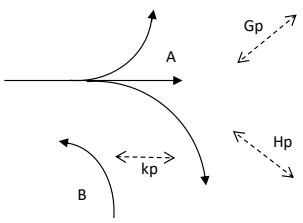

2.

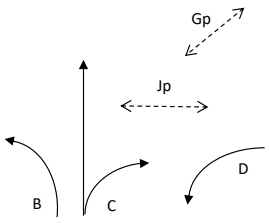

3.

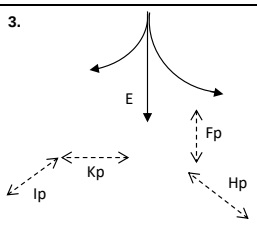

4.

5.

AM Critical Case: A,C,E					
I/G= 7 G = 16	I/G= 9 G = 18	I/G= 9 G = 24	I/G=	I/G=	
PM Critical Case: A,C,E					
I/G= 7 G = 14	I/G= 9 G = 18	I/G= 9 G = 26	I/G=	I/G=	

Simplified Priority Junction Capacity Calculation

Job Title:	Section 16 Planning Application for Proposed Temporary Workshop and Storage Yard		
Junction:	Castle Peak Road - Tam Mei / Fung Kat Heung Road	Designed by:	TSO
Scheme:	Reference	Checked by:	LHW
Design Year:	2027	Job No.: CHK50769210	Date: Dec-23
Arm A:	Castle Peak Road - Tam Mei (Southbound)		
Arm B:	Fung Kat Heung Road		
Arm C:	Castle Peak Road - Tam Mei (Northbound)		

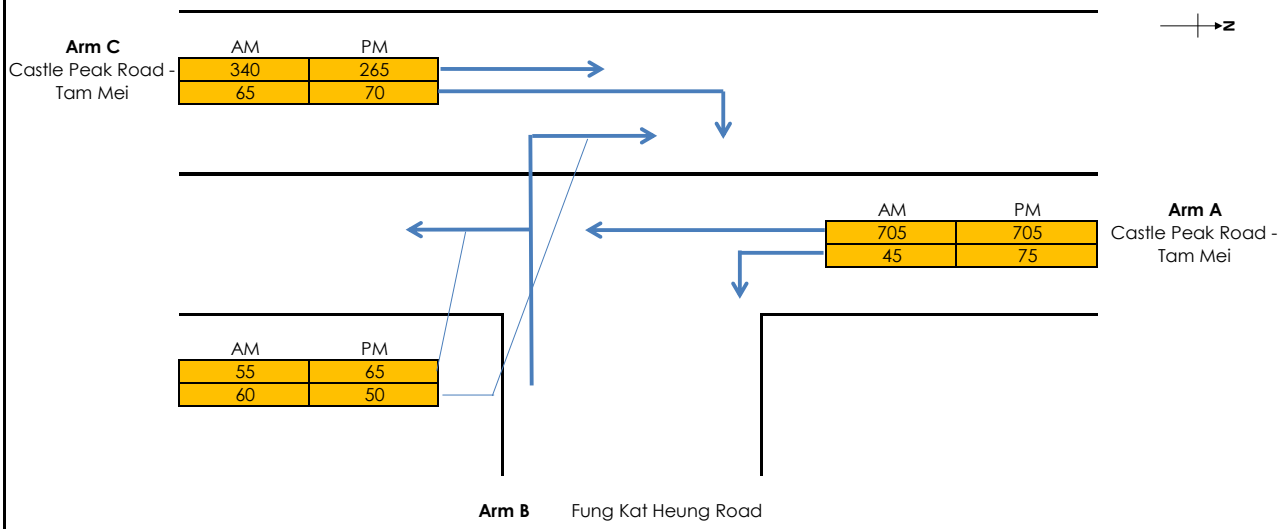

GEOMETRY

Major Road Width (m)	W	7.00	Lane widths (m)	w(b-a)	2.80
Central Reserve Width (m)	Wcr	0.00		w(b-c)	2.80
Blockage of major road right turn	Y/N?	N		w(c-b)	3.50
Combined stream on minor arm	Y/N?	Y			
Visibility Distances (m)	Vr(b-a)	60	Calculated Parameters	D	0.834
	Vl(b-a)	80		E	0.87
	Vr(b-c)	60		F	0.959
	Vr(c-b)	90		Y	0.759

ANALYSIS		**AM PEAK**	**PM PEAK**
TRAFFIC FLOWS (pcu/hr)	q(c-a)	340	265
	q(c-b)	65	70
	q(a-b)	45	75
	q(a-c)	705	705
	q(b-a)	60	50
	q(b-c)	55	65
	f	0.48	0.57
CAPACITIES (pcu/hr)	Q(b-ac)	352.993	372.4
	Q(c-b)	516.025	508.1
RFC's	c-b	0.13	0.14
	b-ac	0.33	0.31
RFC		**0.33**	**0.31**

Where Vl and Vr are visibility distances to the left or right of the respective streams
D = (1+0.094(w(b-a)-3.65))(1+0.0009(Vr(b-a)-120))(1+0.0006(Vl(b-a)-150))
E = (1+0.094(w(b-c)-3.65))(1+0.0009(Vr(b-c)-120))
F = (1+0.094(wc-b)-3.65))(1+0.0009(Vr(c-b)-120))
Y = 1-0.0345W
f = proportion of minor traffic turning left
Q(b-ac) = Q(b-c)*Q(b-a)/(1-f)*Q(b-c)+f*Q(b-a) Capacity of combined streams

All the above formulas are in accordance to T.P.D.M. Volume 2 Chapter 4 Appendix 1

Simplified Priority Junction Capacity Calculation

Job Title:	Section 16 Planning Application for Proposed Temporary Workshop and Storage Yard		
Junction:	Fung Kat Heung Road / Mei Fung Road	Designed by:	TSO
Scheme:	Reference	Checked by:	LHW
Design Year:	2027	Job No.: CHK50769210	Date: Dec-23
Arm A:	Fung Kat Heung Road (Westbound)		
Arm B:	Mei Fung Road		
Arm C:	Fung Kat Heung Road (Eastbound)		

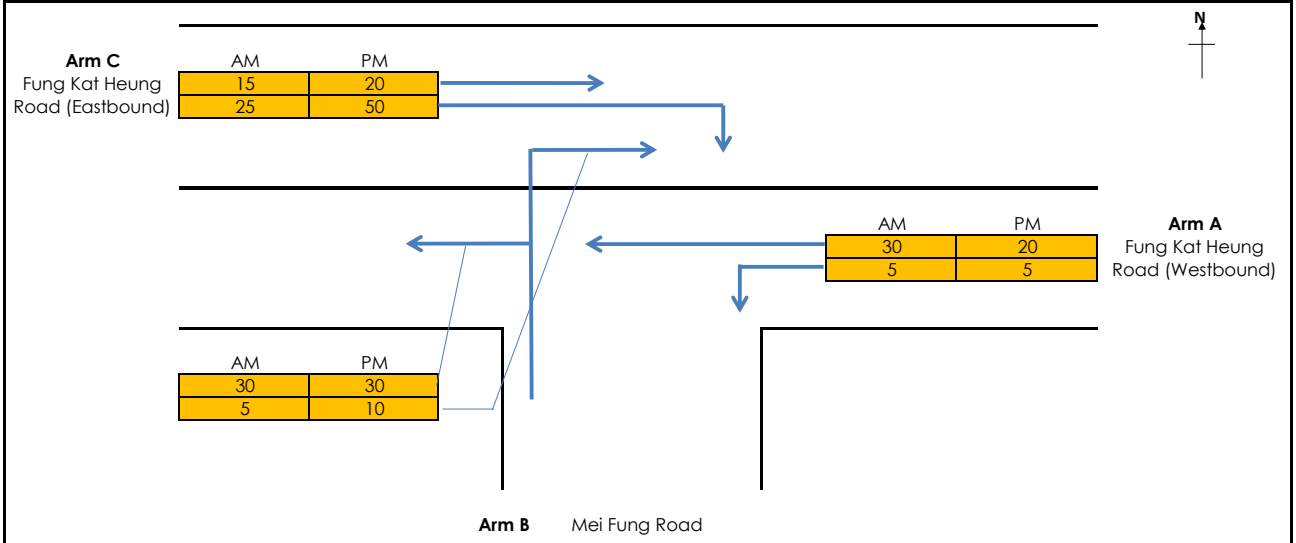

GEOMETRY

Major Road Width (m)	W	3.00	Lane widths (m)	w(b-a)	4.00
Central Reserve Width (m)	Wcr	0.00		w(b-c)	4.00
Blockage of major road right turn	Y/N?	N		w(c-b)	3.00
Combined stream on minor arm	Y/N?	Y			
Visibility Distances (m)	Vr(b-a)	60	Calculated Parameters	D	0.936
	Vl(b-a)	80		E	0.977
	Vr(b-c)	60		F	0.914
	Vr(c-b)	90		Y	0.897

ANALYSIS		**AM PEAK**	**PM PEAK**
TRAFFIC FLOWS (pcu/hr)	q(c-a)	15	20
	q(c-b)	25	50
	q(a-b)	5	5
	q(a-c)	30	20
	q(b-a)	5	10
	q(b-c)	30	30
	f	0.86	0.75
CAPACITIES (pcu/hr)	Q(b-ac)	690.718	670.6
	Q(c-b)	670.161	673.1
RFC's	c-b	0.04	0.07
	b-ac	0.05	0.06
RFC		**0.05**	**0.07**

Where Vl and Vr are visibility distances to the left or right of the respective streams
D = (1+0.094(w(b-a)-3.65))(1+0.0009(Vr(b-a)-120))(1+0.0006(Vl(b-a)-150))
E = (1+0.094(w(b-c)-3.65))(1+0.0009(Vr(b-c)-120))
F = (1+0.094(wc-b)-3.65))(1+0.0009(Vr(c-b)-120))
Y = 1-0.0345W
f = proportion of minor traffic turning left
Q(b-ac) = Q(b-c)*Q(b-a)/(1-f)*Q(b-c)+f*Q(b-a) Capacity of combined streams

All the above formulas are in accordance to T.P.D.M. Volume 2 Chapter 4 Appendix 1

Simplified Priority Junction Capacity Calculation

Job Title:	Section 16 Planning Application for Proposed Temporary Workshop and Storage Yard		
Junction:	Shui Mei Road / Mei Fung Road	Designed by:	TSO
Scheme:	Reference	Checked by:	LHW
Design Year:	2027	Job No.: CHK50769210	Date: Dec-23
Arm A:	Shui Mei Road (Eastbound)		
Arm B:	Mei Fung Road		
Arm C:	Shui Mei Road (Westbound)		

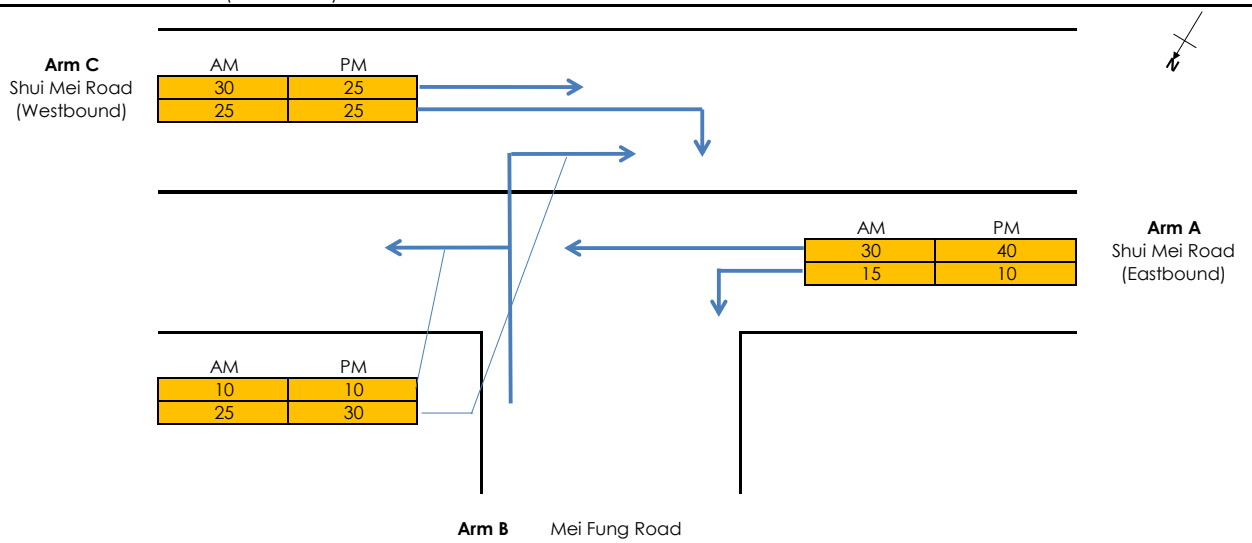

GEOMETRY

Major Road Width (m)	W	14.00	Lane widths (m)	w(b-a)	7.00
Central Reserve Width (m)	Wcr	0.00		w(b-c)	7.00
Blockage of major road right turn	Y/N?	N		w(c-b)	7.00
Combined stream on minor arm	Y/N?	Y			
Visibility Distances (m)	Vr(b-a)	35	Calculated	D	1.178
	Vl(b-a)	100	Parameters	E	1.214
	Vr(b-c)	35		F	1.193
	Vr(c-b)	17		Y	0.517

ANALYSIS		**AM PEAK**	**PM PEAK**
TRAFFIC FLOWS (pcu/hr)	q(c-a)	30	25
	q(c-b)	25	25
	q(a-b)	15	10
	q(a-c)	30	40
	q(b-a)	25	30
	q(b-c)	10	10
	f	0.29	0.25
CAPACITIES (pcu/hr)	Q(b-ac)	761.673	754.8
	Q(c-b)	878.689	877.6
RFC's	c-b	0.03	0.03
	b-ac	0.05	0.05
RFC		**0.05**	**0.05**

Where Vl and Vr are visibility distances to the left or right of the respective streams
D = (1+0.094(w(b-a)-3.65))(1+0.0009(Vr(b-a)-120))(1+0.0006(Vl(b-a)-150))
E = (1+0.094(w(b-c)-3.65))(1+0.0009(Vr(b-c)-120))
F = (1+0.094(wc-b)-3.65))(1+0.0009(Vr(c-b)-120))
Y = 1-0.0345W
f = proportion of minor traffic turning left
Q(b-ac) = Q(b-c)*Q(b-a)/(1-f)*Q(b-c)+f*Q(b-a) Capacity of combined streams

All the above formulas are in accordance to T.P.D.M. Volume 2 Chapter 4 Appendix 1

Simplified Priority Junction Capacity Calculation

Job Title:	Section 16 Planning Application for Proposed Temporary Workshop and Storage Yard		
Junction:	Castle Peak Road - Tam Mei / Shui Mei Road	Designed by:	TSO
Scheme:	Reference	Checked by:	LHW
Design Year:	2027	Job No.: CHK50769210	Date: Dec-23
Arm A:	Castle Peak Road - Tam Mei (Southbound)		
Arm B:	Shui Mei Road		
Arm C:	Castle Peak Road - Tam Mei (Northbound)		

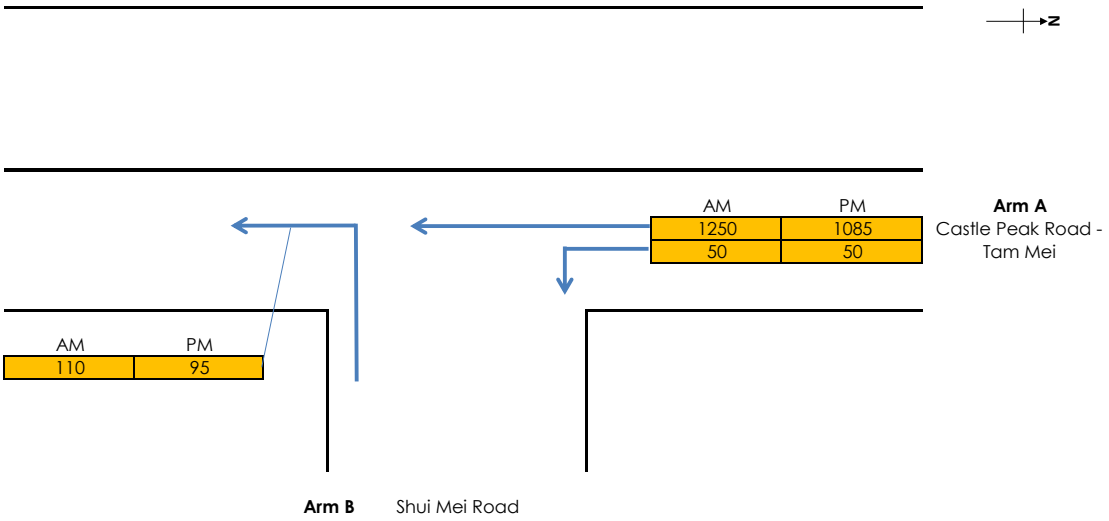

GEOMETRY

Major Road Width (m)	W	8.00	Lane widths (m)	w(b-a)	5.50
Central Reserve Width (m)	Wcr	4.00		w(b-c)	4.80
Blockage of major road right turn	Y/N?	N			
Combined stream on minor arm	Y/N?	Y			
Visibility Distances (m)	Vr(b-a)	40	Calculated Parameters	D	1.037
	Vl(b-a)	70		E	1.028
	Vr(b-c)	40		F	0.616
	Vr(c-b)	50		Y	0.724

ANALYSIS		**AM PEAK**	**PM PEAK**
TRAFFIC FLOWS (pcu/hr)			
	q(a-b)	50	50
	q(a-c)	1250	1085
	q(b-c)	110	95
	f	1.00	1.00
CAPACITIES (pcu/hr)	Q(b-ac)	421.987	466.7
	Q(c-b)	247.685	274.5
RFC's			
	b-ac	0.26	0.20
RFC		**0.26**	**0.20**

Where Vl and Vr are visibility distances to the left or right of the respective streams
D = (1+0.094(w(b-a)-3.65))(1+0.0009(Vr(b-a)-120))(1+0.0006(Vl(b-a)-150))
E = (1+0.094(w(b-c)-3.65))(1+0.0009(Vr(b-c)-120))
F = (1+0.094(wc-b)-3.65))(1+0.0009(Vr(c-b)-120))
Y = 1-0.0345W
f = proportion of minor traffic turning left
Q(b-ac) = Q(b-c)*Q(b-a)/(1-f)*Q(b-c)+f*Q(b-a) Capacity of combined streams

All the above formulas are in accordance to T.P.D.M. Volume 2 Chapter 4 Appendix 1

TRAFFIC SIGNALS CALCULATION

Job No.: CHK50769210 **MVA HONG KONG LIMITED**

Junction: J5 - Castle Peak Road - Tam Mi/San Tam Road Design Year: 2023

Description: Reference 2027 Designed By: TSO Checked By: LHW

Approach	Movements	Phase	Stage	Width (m)	Radius (m) Left	Radius (m) Right	Gradient (%)	Pro. Turning (%) AM	Pro. Turning (%) PM	Revised Saturation Flow (pcu/hr) AM	Revised Saturation Flow (pcu/hr) PM	AM Peak Flow (pcu/hr)	AM Peak y Value	AM Peak Critical y	PM Peak Flow (pcu/hr)	PM Peak y Value	PM Peak Critical y
Western Access Road		D	2	3.500	70					2060	2060	111	0.054		91	0.044	
		D	2	3.500	65					1920	1920	104	0.054		84	0.044	
San Tam Road (SB)		E	3	6.000	58					2160	2160	40	0.019		30	0.014	
		E	3	4.000						2155	2155	423	0.196		391	0.181	0.181
		E	3	3.700		30		4%	4%	2120	2120	417	0.197	0.197	384	0.181	
Castle Peak Road - Tam Mi (EB)		A	1	3.500	28					1865	1865	5	0.003		5	0.003	
		A	1	3.500		20		98%	100%	1960	1960	265	0.135	0.135	200	0.102	0.102
Castle Peak Road - Tam Mi (NB)		B	1,2	3.650	60					1930	1930	345	0.179		325	0.168	
		C	2	3.650						2120	2120	325	0.153	0.153	277	0.131	0.131
		C	2	3.650		30		60%	65%	2060	2055	315	0.153		268	0.130	

Pedestrian Crossing	Fp	3	MIN GREEN + FLASH =	7	+	5	=	12
	Gp	1,2	MIN GREEN + FLASH =	29	+	5	=	34
	Hp	3,1	MIN GREEN + FLASH =	22	+	8	=	30
	Ip	3	MIN GREEN + FLASH =	7	+	5	=	12
	Jp	2	MIN GREEN + FLASH =	7	+	7	=	14
	Kp	3,1	MIN GREEN + FLASH =	25	+	7	=	32

Notes:

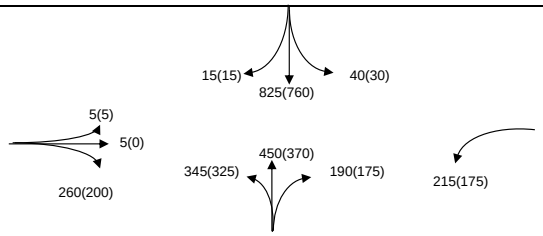

Group	A,D,E	A,C,E	Group	A,D,E	A,C,E
y	0.386	0.485	y	0.328	0.414
L (sec)	18	22	L (sec)	18	22
C (sec)	83	83	C (sec)	83	83
y pract.	0.705	0.661	y pract.	0.705	0.661
R.C. (%)	83%	36%	R.C. (%)	115%	60%

Stage / Phase Diagrams

1.

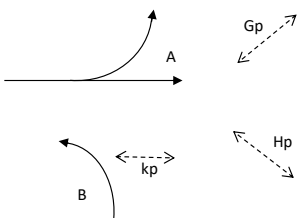

2.

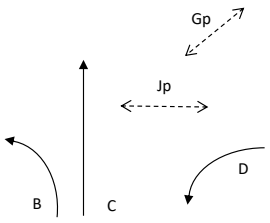

3.

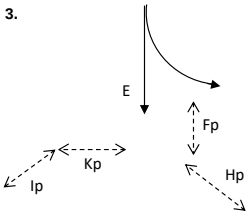

4.

5.

AM Critical Case: A,C,E

I/G= 7	G = 16	I/G= 9	G = 18	I/G= 9	G = 24	I/G=	I/G=

PM Critical Case: A,C,E

I/G= 7	G = 14	I/G= 9	G = 18	I/G= 9	G = 26	I/G=	I/G=

Simplified Priority Junction Capacity Calculation

Job Title:	Section 16 Planning Application for Proposed Temporary Workshop and Storage Yard		
Junction:	Castle Peak Road - Tam Mei / Fung Kat Heung Road	Designed by:	TSO
Scheme:	Design	Checked by:	LHW
Design Year:	2027	Job No.: CHK50769210	Date: Dec-23
Arm A:	Castle Peak Road - Tam Mei (Southbound)		
Arm B:	Fung Kat Heung Road		
Arm C:	Castle Peak Road - Tam Mei (Northbound)		

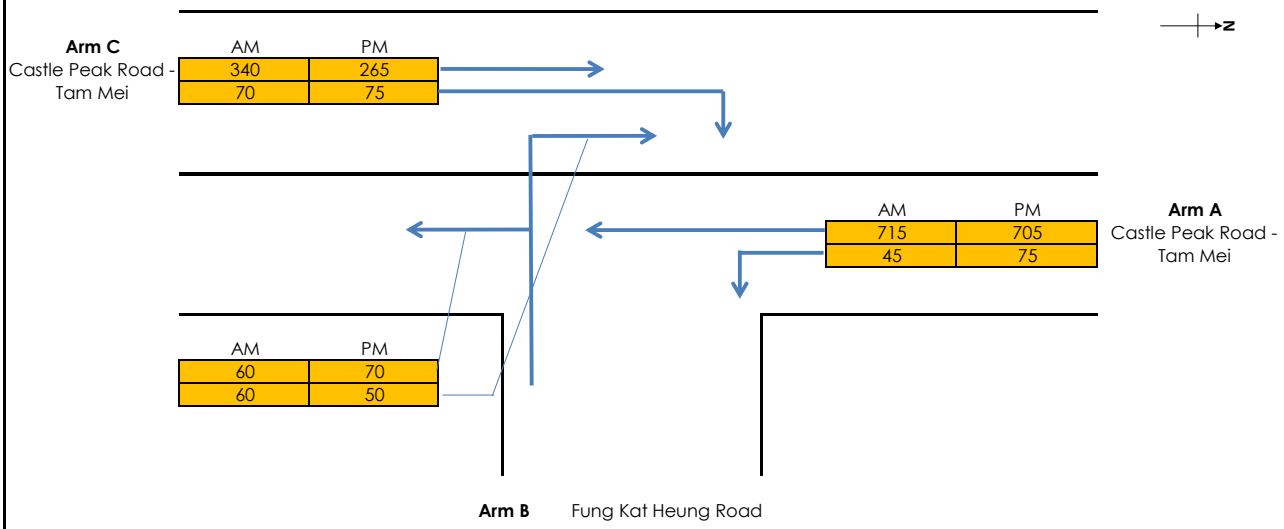

GEOMETRY

Major Road Width (m)	W	7.00	Lane widths (m)	w(b-a)	2.80
Central Reserve Width (m)	Wcr	0.00		w(b-c)	2.80
Blockage of major road right turn	Y/N?	N		w(c-b)	3.50
Combined stream on minor arm	Y/N?	Y			
Visibility Distances (m)	Vr(b-a)	60	Calculated Parameters	D	0.834
	Vl(b-a)	80		E	0.87
	Vr(b-c)	60		F	0.959
	Vr(c-b)	90		Y	0.759

ANALYSIS		**AM PEAK**	**PM PEAK**
TRAFFIC FLOWS (pcu/hr)	q(c-a)	340	265
	q(c-b)	70	75
	q(a-b)	45	75
	q(a-c)	715	705
	q(b-a)	60	50
	q(b-c)	60	70
	f	0.50	0.58
CAPACITIES (pcu/hr)	Q(b-ac)	353.045	374.6
	Q(c-b)	513.377	508.1
RFC's	c-b	0.14	0.15
	b-ac	0.34	0.32
RFC		**0.34**	**0.32**

Where Vl and Vr are visibility distances to the left or right of the respective streams
D = (1+0.094(w(b-a)-3.65))(1+0.0009(Vr(b-a)-120))(1+0.0006(Vl(b-a)-150))
E = (1+0.094(w(b-c)-3.65))(1+0.0009(Vr(b-c)-120))
F = (1+0.094(wc-b)-3.65))(1+0.0009(Vr(c-b)-120))
Y = 1-0.0345W
f = proportion of minor traffic turning left
Q(b-ac) = Q(b-c)*Q(b-a)/(1-f)*Q(b-c)+f*Q(b-a) Capacity of combined streams

All the above formulas are in accordance to T.P.D.M. Volume 2 Chapter 4 Appendix 1

Simplified Priority Junction Capacity Calculation

Job Title:	Section 16 Planning Application for Proposed Temporary Workshop and Storage Yard		
Junction:	Fung Kat Heung Road / Mei Fung Road	Designed by:	TSO
Scheme:	Design	Checked by:	LHW
Design Year:	2027	Job No.: CHK50769210	Date: Dec-23
Arm A:	Fung Kat Heung Road (Westbound)		
Arm B:	Mei Fung Road		
Arm C:	Fung Kat Heung Road (Eastbound)		

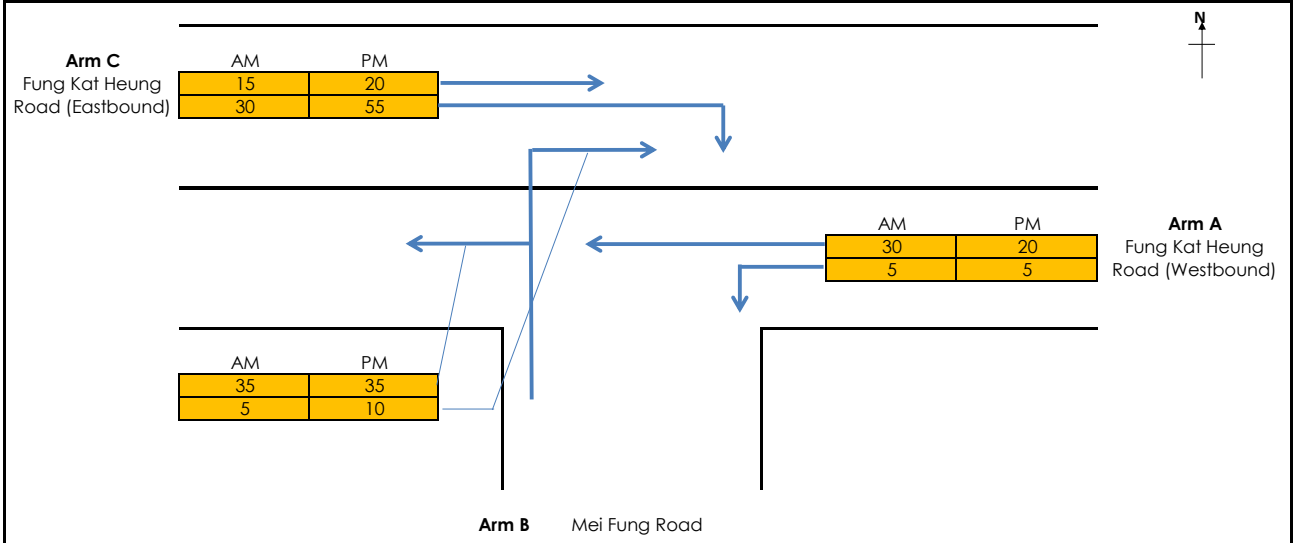

GEOMETRY

Major Road Width (m)	W	3.00	Lane widths (m)	w(b-a)	4.00
Central Reserve Width (m)	Wcr	0.00		w(b-c)	4.00
Blockage of major road right turn	Y/N?	N		w(c-b)	3.00
Combined stream on minor arm	Y/N?	Y			
Visibility Distances (m)	Vr(b-a)	60	Calculated Parameters	D	0.936
	Vl(b-a)	80		E	0.977
	Vr(b-c)	60		F	0.914
	Vr(c-b)	90		Y	0.897

ANALYSIS		**AM PEAK**	**PM PEAK**
TRAFFIC FLOWS (pcu/hr)	q(c-a)	15	20
	q(c-b)	30	55
	q(a-b)	5	5
	q(a-c)	30	20
	q(b-a)	5	10
	q(b-c)	35	35
	f	0.88	0.78
CAPACITIES (pcu/hr)	Q(b-ac)	693.571	675.2
	Q(c-b)	670.161	673.1
RFC's	c-b	0.04	0.08
	b-ac	0.06	0.07
RFC		**0.06**	**0.08**

Where Vl and Vr are visibility distances to the left or right of the respective streams
D = (1+0.094(w(b-a)-3.65))(1+0.0009(Vr(b-a)-120))(1+0.0006(Vl(b-a)-150))
E = (1+0.094(w(b-c)-3.65))(1+0.0009(Vr(b-c)-120))
F = (1+0.094(wc-b)-3.65))(1+0.0009(Vr(c-b)-120))
Y = 1-0.0345W
f = proportion of minor traffic turning left
Q(b-ac) = Q(b-c)*Q(b-a)/(1-f)*Q(b-c)+f*Q(b-a) Capacity of combined streams

All the above formulas are in accordance to T.P.D.M. Volume 2 Chapter 4 Appendix 1

Simplified Priority Junction Capacity Calculation

Job Title:	Section 16 Planning Application for Proposed Temporary Workshop and Storage Yard		
Junction:	Shui Mei Road / Mei Fung Road	Designed by:	TSO
Scheme:	Design	Checked by:	LHW
Design Year:	2027	Job No.: CHK50769210	Date: Dec-23
Arm A:	Shui Mei Road (Eastbound)		
Arm B:	Mei Fung Road		
Arm C:	Shui Mei Road (Westbound)		

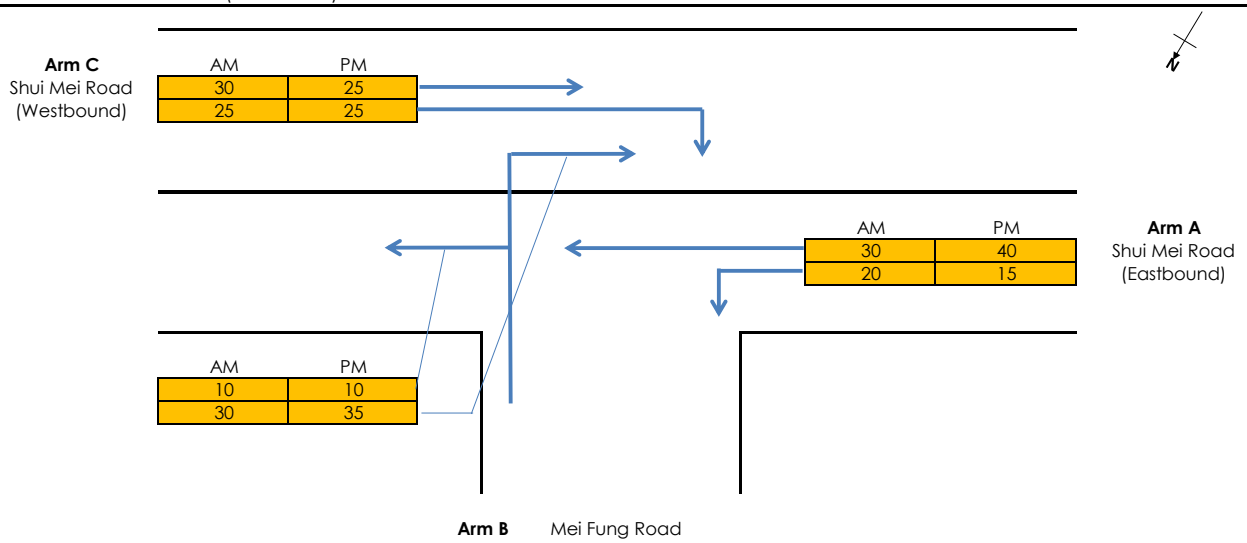

GEOMETRY

Major Road Width (m)	W	14.00	Lane widths (m)	w(b-a)	7.00
Central Reserve Width (m)	Wcr	0.00		w(b-c)	7.00
Blockage of major road right turn	Y/N?	N		w(c-b)	7.00
Combined stream on minor arm	Y/N?	Y			
Visibility Distances (m)	Vr(b-a)	35	Calculated Parameters	D	1.178
	Vl(b-a)	100		E	1.214
	Vr(b-c)	35		F	1.193
	Vr(c-b)	17		Y	0.517

ANALYSIS		**AM PEAK**	**PM PEAK**
TRAFFIC FLOWS (pcu/hr)	q(c-a)	30	25
	q(c-b)	25	25
	q(a-b)	20	15
	q(a-c)	30	40
	q(b-a)	30	35
	q(b-c)	10	10
	f	0.25	0.22
CAPACITIES (pcu/hr)	Q(b-ac)	755.546	750
	Q(c-b)	877.566	876.4
RFC's	c-b	0.03	0.03
	b-ac	0.05	0.06
RFC		**0.05**	**0.06**

Where Vl and Vr are visibility distances to the left or right of the respective streams
D = (1+0.094(w(b-a)-3.65))(1+0.0009(Vr(b-a)-120))(1+0.0006(Vl(b-a)-150))
E = (1+0.094(w(b-c)-3.65))(1+0.0009(Vr(b-c)-120))
F = (1+0.094(wc-b)-3.65))(1+0.0009(Vr(c-b)-120))
Y = 1-0.0345W
f = proportion of minor traffic turning left
Q(b-ac) = Q(b-c)*Q(b-a)/(1-f)*Q(b-c)+f*Q(b-a) Capacity of combined streams

All the above formulas are in accordance to T.P.D.M. Volume 2 Chapter 4 Appendix 1

Simplified Priority Junction Capacity Calculation

Job Title:	Section 16 Planning Application for Proposed Temporary Workshop and Storage Yard		
Junction:	Castle Peak Road - Tam Mei / Shui Mei Road	Designed by:	TSO
Scheme:	Design	Checked by:	LHW
Design Year:	2027	Job No.: CHK50769210	Date: Dec-23
Arm A:	Castle Peak Road - Tam Mei (Southbound)		
Arm B:	Shui Mei Road		
Arm C:	Castle Peak Road - Tam Mei (Northbound)		

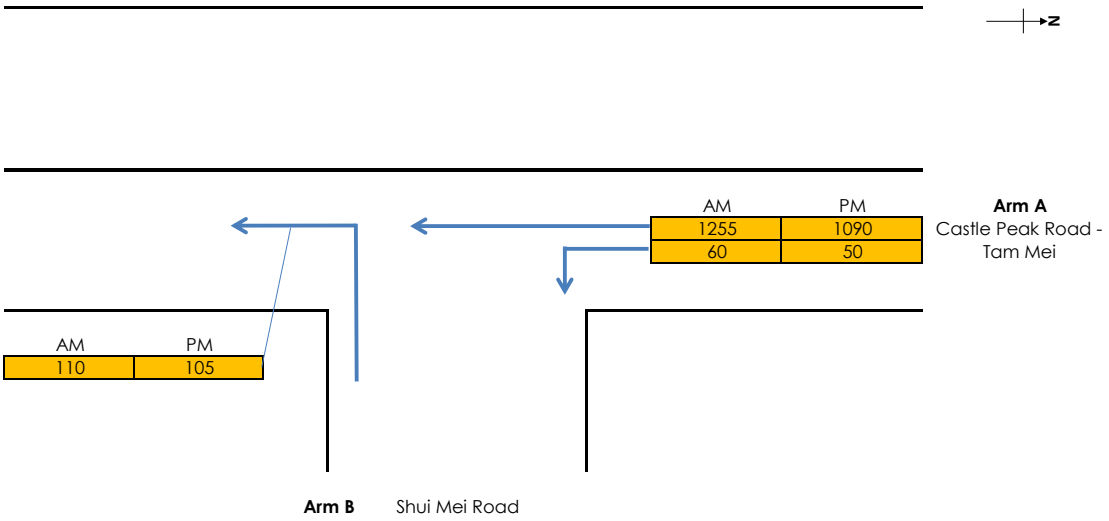

GEOMETRY

Major Road Width (m)	W	8.00	Lane widths (m)	w(b-a)	5.50
Central Reserve Width (m)	Wcr	4.00		w(b-c)	4.80
Blockage of major road right turn	Y/N?	N			
Combined stream on minor arm	Y/N?	Y			
Visibility Distances (m)	Vr(b-a)	40	Calculated Parameters	D	1.037
	Vl(b-a)	70		E	1.028
	Vr(b-c)	40		F	0.616
	Vr(c-b)	50		Y	0.724

ANALYSIS		**AM PEAK**	**PM PEAK**
TRAFFIC FLOWS (pcu/hr)			
	q(a-b)	60	50
	q(a-c)	1255	1090
	q(b-c)	110	105
	f	1.00	1.00
CAPACITIES (pcu/hr)	Q(b-ac)	419.56	465.3
	Q(c-b)	245.252	273.6
RFC's			
	b-ac	0.26	0.23
RFC		**0.26**	**0.23**

Where Vl and Vr are visibility distances to the left or right of the respective streams
D = (1+0.094(w(b-a)-3.65))(1+0.0009(Vr(b-a)-120))(1+0.0006(Vl(b-a)-150))
E = (1+0.094(w(b-c)-3.65))(1+0.0009(Vr(b-c)-120))
F = (1+0.094(wc-b)-3.65))(1+0.0009(Vr(c-b)-120))
Y = 1-0.0345W
f = proportion of minor traffic turning left
Q(b-ac) = Q(b-c)*Q(b-a)/(1-f)*Q(b-c)+f*Q(b-a) Capacity of combined streams

All the above formulas are in accordance to T.P.D.M. Volume 2 Chapter 4 Appendix 1

TRAFFIC SIGNALS CALCULATION

Job No.: CHK50769210 **MVA HONG KONG LIMITED**

Junction: J5 - Castle Peak Road - Tam Mi/San Tam Road Design Year: 2023

Description: Design 2027 Designed By: TSO Checked By: LHW

Approach	Movements	Phase	Stage	Width (m)	Radius (m) Left	Radius (m) Right	Gradient (%)	Pro. Turning (%) AM	Pro. Turning (%) PM	Revised Saturation Flow (pcu/hr) AM	Revised Saturation Flow (pcu/hr) PM	AM Peak Flow (pcu/hr)	AM Peak y Value	AM Peak Critical y	PM Peak Flow (pcu/hr)	PM Peak y Value	PM Peak Critical y
Western Access Road		D	2	3.500	70					2060	2060	111	0.054		91	0.044	
		D	2	3.500	65					1920	1920	104	0.054		84	0.044	
San Tam Road (SB)		E	3	6.000	58					2160	2160	40	0.019		30	0.014	
		E	3	4.000						2155	2155	431	0.200		393	0.182	0.182
		E	3	3.700		30		4%	4%	2120	2120	424	0.200	0.200	387	0.183	
Castle Peak Road - Tam Mi (EB)		A	1	3.500	28					1865	1865	5	0.003		5	0.003	
		A	1	3.500		20		98%	100%	1960	1960	265	0.135	0.135	200	0.102	0.102
Castle Peak Road - Tam Mi (NB)		B	1,2	3.650	60					1930	1930	355	0.184		325	0.168	
		C	2	3.650						2120	2120	327	0.154	0.154	279	0.132	0.132
		C	2	3.650		30		60%	65%	2060	2055	318	0.154		271	0.132	

Pedestrian Crossing	Fp	3	MIN GREEN + FLASH =	7	+	5	=	12
	Gp	1,2	MIN GREEN + FLASH =	29	+	5	=	34
	Hp	3,1	MIN GREEN + FLASH =	22	+	8	=	30
	Ip	3	MIN GREEN + FLASH =	7	+	5	=	12
	Jp	2	MIN GREEN + FLASH =	7	+	7	=	14
	Kp	3,1	MIN GREEN + FLASH =	25	+	7	=	32

Notes:

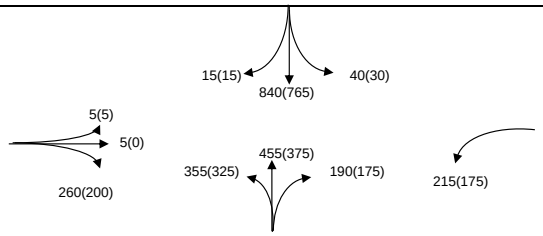

Group	A,D,E	A,C,E	Group	A,D,E	A,C,E
y	0.389	0.489	y	0.329	0.416
L (sec)	18	22	L (sec)	18	22
C (sec)	83	83	C (sec)	83	83
y pract.	0.705	0.661	y pract.	0.705	0.661
R.C. (%)	81%	35%	R.C. (%)	115%	59%

Stage / Phase Diagrams

1.

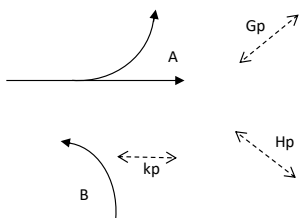

2.

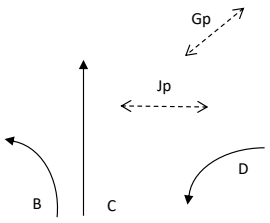

3.

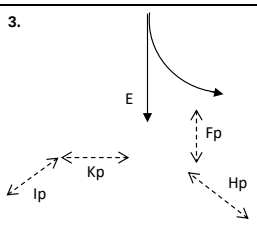

4.

5.

AM Critical Case: A,C,E									
I/G= 7	G = 16	I/G= 9	G = 18	I/G= 9	G = 24	I/G=		I/G=	
PM Critical Case: A,C,E									
I/G= 7	G = 14	I/G= 9	G = 18	I/G= 9	G = 26	I/G=		I/G=	

APPENDIX B

SWEPT PATH ANALYSIS

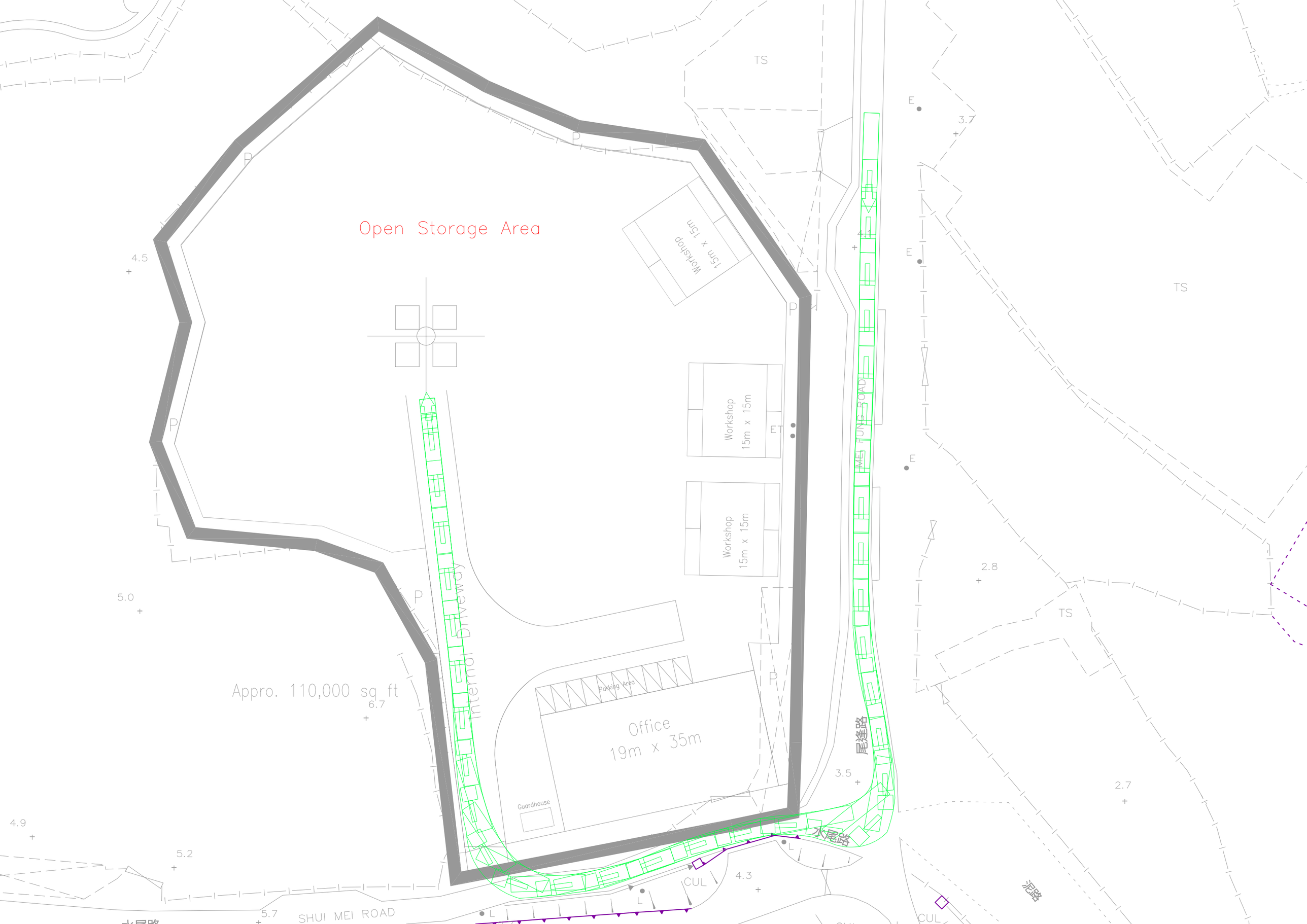

Open Storage Area
Workshop
15m x 15m
Workshop
15m x 15m
Workshop
15m x 15m
Internal Driveway
Parking Area
Office
19m x 35m
Guardhouse
Appro. 110,000 sq ft
MEI FUNG ROAD
尾逢路
水尾路
SHUI MEI ROAD
TS
TS
TS
CUL
CUL
4.5
5.0
6.7
4.9
5.2
5.7
4.3
3.5
2.8
2.7
3.7

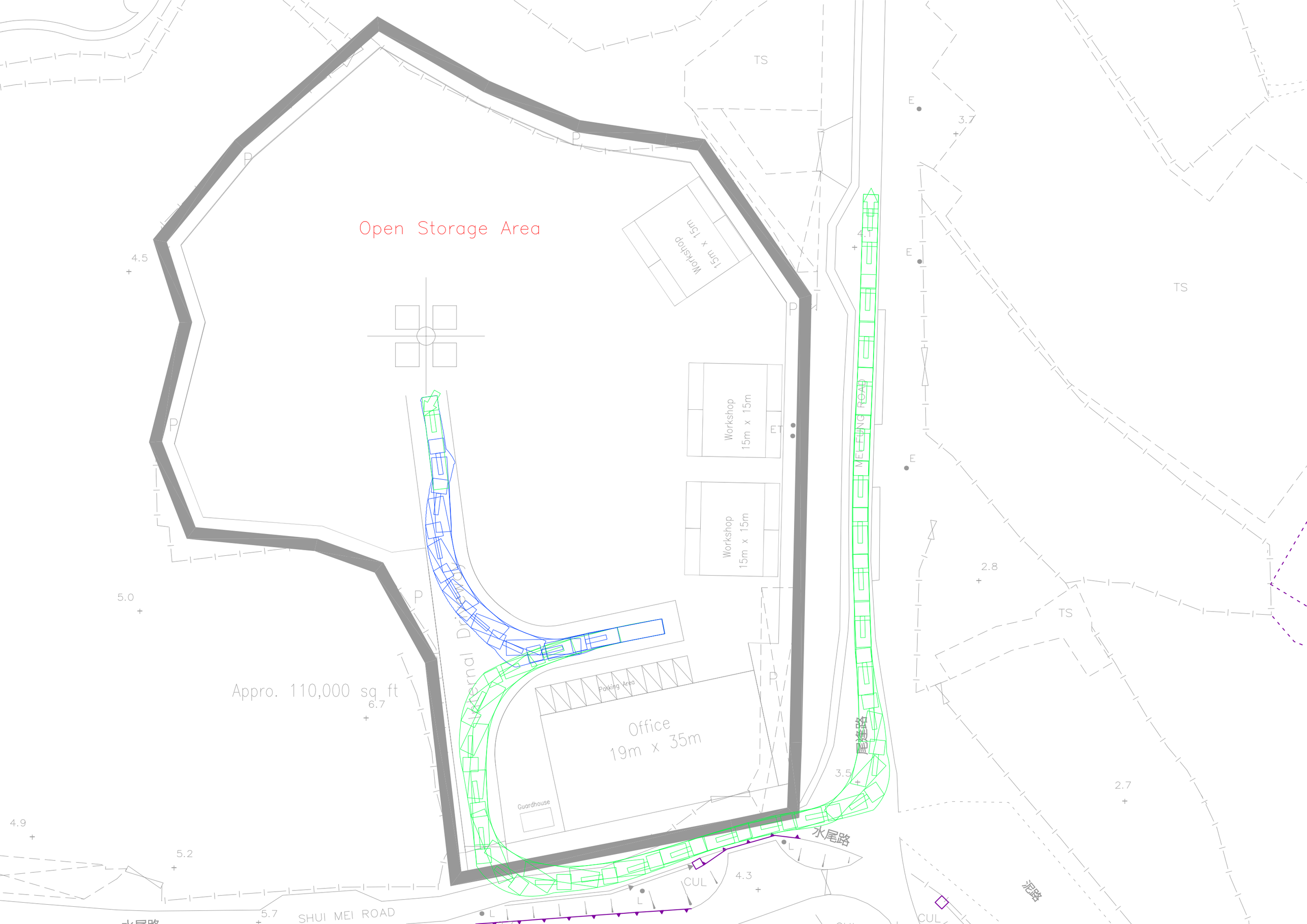

Open Storage Area
Workshop
15m x 15m
Workshop
15m x 15m
Workshop
15m x 15m
Appro. 110,000 sq ft
Internal Driveway
Parking Area
Office
19m x 35m
Guardhouse
MEI FUNG ROAD
尾逢路
水尾路
SHUI MEI ROAD
CUL
TS
E
P
ET
4.5
5.0
6.7
4.9
5.2
5.7
4.3
3.5
4.1
3.7
2.8
2.7