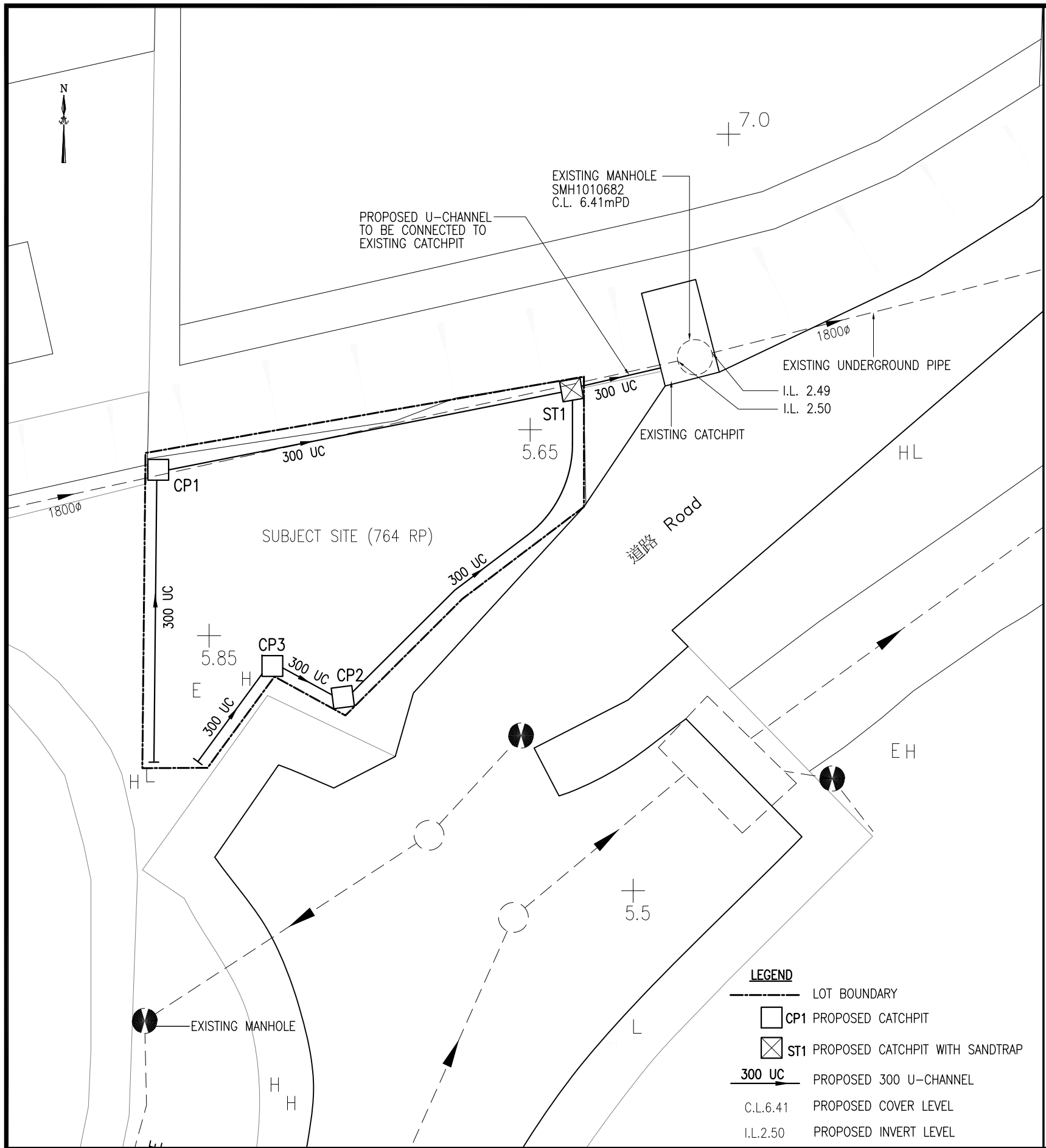

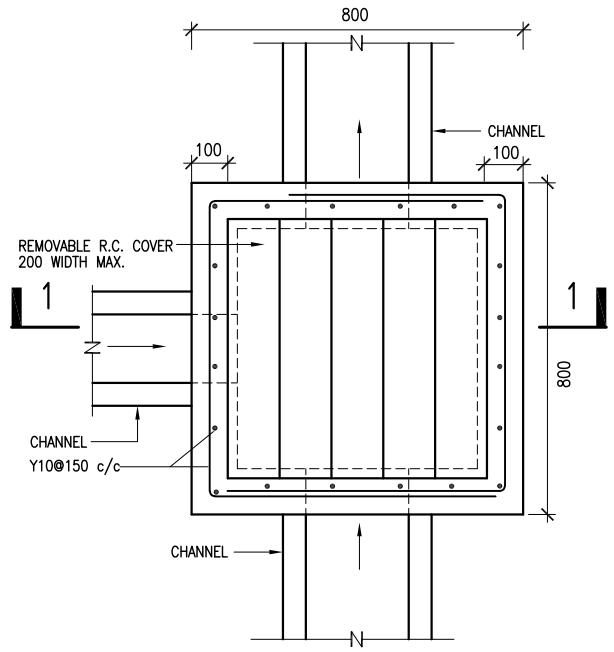

PLAN OF CATCH-PIT

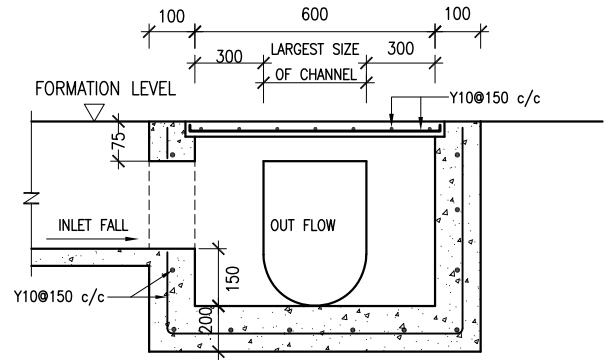

SECTION 1 – 1

DETAILS OF CATCH-PIT

N. T. S.

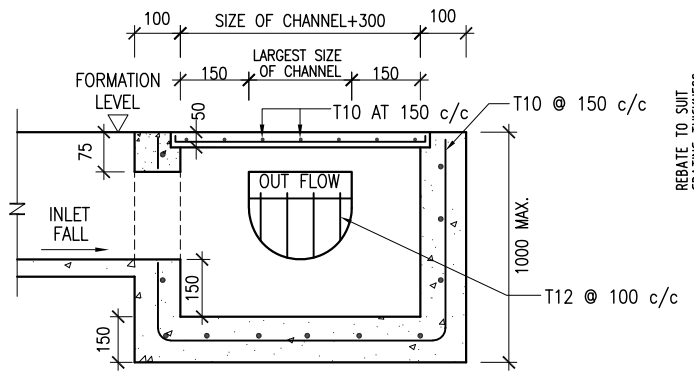

CATCHPIT WITH SANDTRAP (ST1)

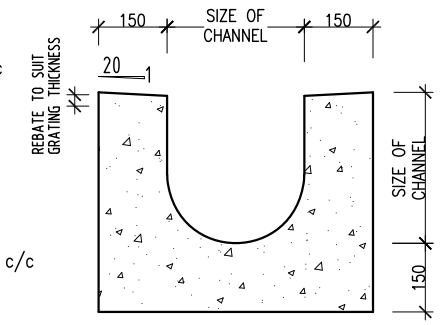

U-CHANNEL

N. T. S.

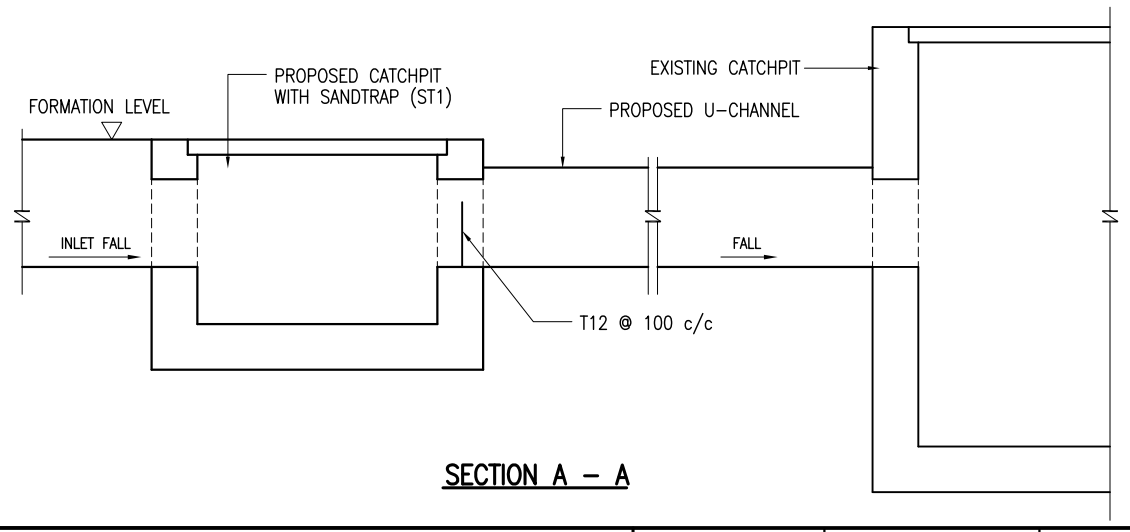

SECTION A – A

利安設計工程有限公司
LEON Design Engineering Limited
新界屯門藍地屯子圍205號
No. 205 Tuen Tsz Wai, Lam Tei, Tuen Mun, N.T.
Tel: 2328 7060 Fax: 2328 7080 E-mail: leonlimited@gmail.com

This drawing and design are copyright of LEON DESIGN ENG. LTD. No portion may be reproduced without the company written permission. Used written dimensions. measurement to existing works to be verified on site. This drawing shall be read in conjunction with specification and condition of contract.

PROJECT

LOT 764RP IN D.D. 120
MA TIN ROAD,YUEN LONG, N.T.

TITLE

PROPOSED DRAINAGE LAYOUT PLAN

DRAWN BY	CHECKED BY	DATE
PT	PT	April 2024

SCALE	JOB NO.
1 : 200(A3)	LD/ –

CAD / FILE	DWG NO.
LD-L764RP-D01	LD/L764RP/D01